600
Service Manual

General Information 2
Installation Information 9
Controls & Operation 15
Sealed System 40
Air Flow & Fan Blade Spacing 46
Icemaker Information 50
Component Access & Removal 59
Troubleshooting Guide 114
Technical Data 131
Wiring Diagrams 143

INTRODUCTION

This Technical Service Manual has been compiled to provide the most recent service information for 600-3 Series units. This information will enable the service technician to troubleshoot and diagnose malfunctions, perform necessary repairs, and return a unit to proper operational condition.

The service technician should read the complete instructions contained in this manual before initiating any repairs on a 600-3 Series unit.

IMPORTANT SAFETY INFORMATION

Below are Product Safety Labels used in this manual. The "Signal Words" used are **WARNING** or **CAUTION**.

When reviewing this manual, please note these different Product Safety Labels placed at the beginning of certain sections of this manual. You must follow the instructions given in the boxes of the Product Safety Labels in order to avoid personal injury and/or product damage.

The sample Product Safety Labels below illustrate the precautions that should be taken when the signal word is observed.

⚠ WARNING

INDICATES THAT HAZARDOUS OR UNSAFE PRACTICES COULD RESULT IN SEVERE PERSONAL INJURY OR DEATH.

⚠ CAUTION

Indicates that hazardous or unsafe practices could result in minor personal injury, and/or product damage, and/or property damage.

In addition, please pay attention to the signal word ***"NOTE"***, which highlights information that is especially important for the topic being covered.

TECHNICAL ASSISTANCE

If you should have any questions regarding the 600-3 Series and/or this manual, please contact:

Sub-Zero Freezer Company, Inc.
ATTN: Service Department
P.O. Box 44988
Madison, WI 53744 - 4988

Customer Service & Parts / Warranty Claims
Phone #: (800) 222 - 7820

Technical Assistance
Phone #: (800) 919 - 8324

Customer Service & Technical Assistance
Facsimile #: (608) 441 - 5887

Parts / Warranty Claims
Facsimile #: (608) 441 - 5886

Service Department E-Mail Address:
customerservice@subzero.com

Office Hours:
7:00 AM to 7:00 PM Central Time
Monday through Friday

This manual is designed to be used by Authorized Service Personnel only. Sub-Zero Freezer Co., Inc. assumes no responsibility for any repairs made on Sub-Zero refrigeration units by anyone other than Authorized Service Technicians.

Information and images contained in this manual are the copyright property of Sub-Zero Freezer Company, Inc. Neither this manual nor any information or images contained herein may be copied or used in whole or in part without the express written consent of Sub-Zero Freezer Company, Inc.
© Sub-Zero Freezer Company, Inc, all rights reserved.

WARRANTY INFORMATION

This page summarizes the *2, 5 & 12 Year Warranty* provided with every Sub-Zero appliance, as well as two special warranties:

- *Non-Residential Warranty* - Applies to units installed in non-residential applications.
- *Display/Model Home Warranty* - Applies to distributor or dealer display units, and units in model homes, sold three years after date of manufacture.

Following the warranty summaries are details and notes about the warranties.

TWO, FIVE & TWELVE YEAR Warranty

- 2 year TOTAL PRODUCT, *parts and labor.

  NOTE: *Stainless Steel (Classic, carBon & Platinum) doors, panels & product frames are covered by a 60 day parts & labor warranty for cosmetic defects.*
- 5 Year SEALED SYSTEM, **parts and labor.
- 6th - 12th year LIMITED SEALED SYSTEM, **parts only.

ONE & FIVE YEAR Non-Residential Warranty (Example: Office, Yacht, etc.)

- 1 Year TOTAL PRODUCT, *parts and labor.

  NOTE: *Stainless Steel (Classic, carBon & Platinum) doors, panels & product frames are covered by a 60 day parts & labor warranty for cosmetic defects.*
- 5 Year SEALED SYSTEM, **parts and labor.

ONE & FIVE YEAR Display/Model Home Warranty (Display units sold three years after date of manufacture)

- 1 Year TOTAL PRODUCT, *parts and labor.

  NOTE: *Stainless Steel (Classic, carBon & Platinum) doors, panels & product frames are covered by a 60 day parts & labor warranty for cosmetic defects.*
- 5 Year SEALED SYSTEM, **parts and labor.

Warranty Details:

* *Includes, but is not limited to the following:*

Electronic Control System Components, Fan & Light Switches, Fan Motors & Blades, Defrost & Drain Heaters, Defrost Terminator, Drain Pan, Drain Tubes, Wiring, Light sockets & bulbs, Icemaker, Water Valve, Door hinges, Door closers & Cams, Compressor Electricals, etc. . .

* *Stainless Steel (Classic, Platinum & Carbon) doors, panels and product frames are covered by a limited 60 day parts and labor warranty for cosmetic defects.*

** *Includes the following:*

Compressors, Condenser, Evaporators, Filter-Driers, Heat-exchangers, All Tubing that Carries the Freon.

NOTE: *Condenser Fan Motors, Freon, Solder and compressor electricals are NOT considered sealed system parts.*

Warranty Notes:

- *All warranties begin at unit's initial installation date.*
- *All Warranty and Service information collected by Sub-Zero is arranged and stored under the unit serial number, and the customer's last name.*
  Sub-Zero requests that you have the model and serial number available whenever contacting the factory or parts distributor.
- *The serial tag on SIDE-BY-SIDE models is located by the top door hinge in the freezer compartment.*
- *The serial tag on OVER-AND-UNDER models is located by the top door hinge in the refrigerator compartment.*
- *The serial tag on ALL-REFRIGERATOR and ALL-FREEZER models is located by the top door hinge in the refrigeration compartment.*

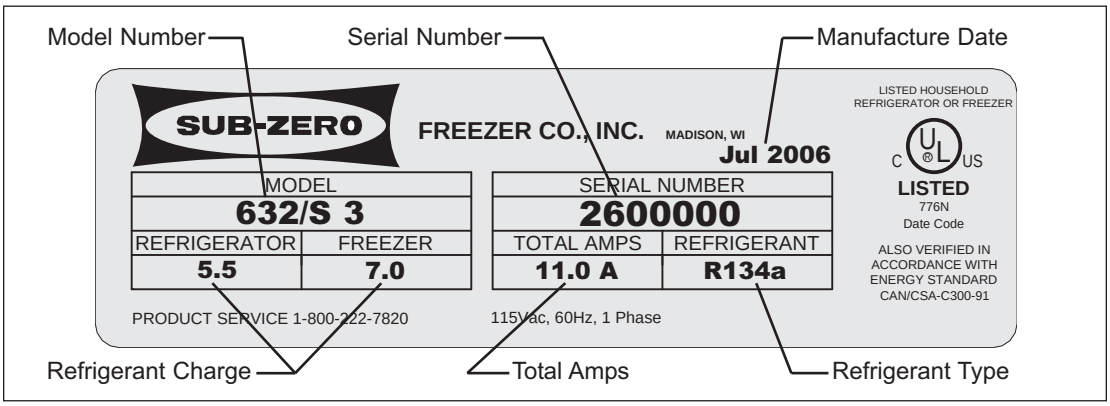

Figure 1-1. Serial Tag Layout (Layout Reference Only)

MODEL DESCRIPTIONS

These pages briefly describes the models covered in this 600-3 Series Technical Service Manual *(Models 601R-3, 601RG-3, 601F-3, 611-3, 611G-3, 632-3, 642-3, 650-3, 650G-3, 661-3, 685-3, 695-3)* The letter after the backward slash in the alpha-numeric model number indicates the exterior variation ("**/F**" indicates a **Framed** look with the door trim visible, "**/O**" indicates that it is intended for the door panels to **Overlay** the door trim, "**/S**" indicates the unit is **Classic Stainless Steel** finish, **"/B**" indicates the unit is **carBon** Stainless Steel finish, **"/P**" indicates the unit is **Platinum** Stainless Steel finish). The "**-3**" means this is the third design build for this series.

The following lists contain the model numbers of the 600-3 Series with a brief description of each model. A diagram of the basic model configuration accompanies each list.

NOTE: *Functional parts are common to each model configuration, meaning for example, models 601R/F-3, 601R/O-3 and 601R/S-3 will utilize common functional parts. For this reason, the backward slash and letter after the model numbers will only be used in this manual when necessary.*

MODEL	DESCRIPTION
601R/F-3	36" Wide, All-Refrigerator, Framed Door Trim with Handle, Louver Grille
601R/O-3	36" Wide, All-Refrigerator, Overlay Door Trim without Handle, Louver Grille
601R/S-3	36" Wide, All-Refrigerator, Classic Stainless Steel Door and Grille
601R/B-3	36" Wide, All-Refrigerator, CarBon Stainless Steel Door and Grille
601R/P-3	36" Wide, All-Refrigerator, Platinum Stainless Steel Door and Grille

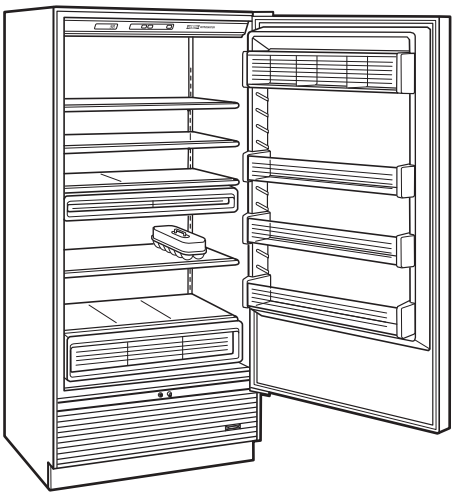

Model 601R-3

MODEL	DESCRIPTION
601RG/F-3	36" Wide, All-Refrigerator, Glass Door, Framed Door trim with Handle, Louver Grille
601RHAG/F-3	*(Same as above with High Altitude Glass)*
601RG/O-3	36" Wide, All-Refrigerator, Glass Door, Overlay Door Trim w/o handle, Louver Grille
601RHAG/O-3	*(Same as above with High Altitude Glass)*
601RG/S-3	36" Wide, All-Refrigerator, Glass Door, Classic Stainless Steel Door and Grille
601RHAG/S-3	*(Same as above with High Altitude Glass)*
601RG/B-3	36" Wide, All-Refrigerator, Glass Door, carBon Stainless Steel Door and Grille
601RHAG/B-3	*(Same as above with High Altitude Glass)*
601RG/P-3	36" Wide, All-Refrigerator, Glass Door, Platinum Stainless Steel Door and Grille
601RHAG/P-3	*(Same as above with High Altitude Glass)*

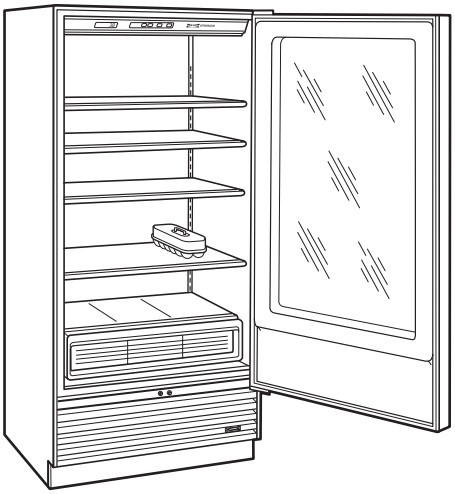

Model 601RG-3

MODEL	DESCRIPTION
601F/F-3	36” Wide, All-Freezer, Framed Door Trim with Handle, Louver Grille
601F/O-3	36” Wide, All-Freezer, Overlay Door Trim without Handle, Louver Grille
601F/S-3	36” Wide, All-Freezer, Classic Stainless Steel Door and Grille
601F/B-3	36” Wide, All-Freezer, CarBon Stainless Steel Door and Grille
601F/P-3	36” Wide, All-Freezer, Platinum Stainless Steel Door and Grille

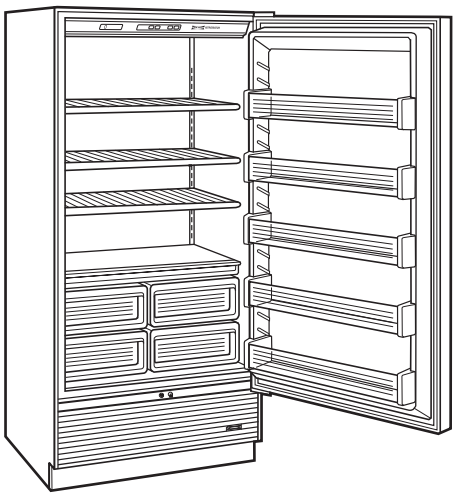

Model 601F-3

MODEL	DESCRIPTION
611/F-3	30” Wide, Over/Under, Framed Door Trim with handles, Louver Grille (Standard)
611/O-3	30” Wide, Over/Under, Overlay Door Trim without handles, Panel Grille (Standard)
611/S-3	30” Wide, Over/Under, Classic Stainless Steel Doors and Grille
611/B-3	30” Wide, Over/Under, carBon Stainless Steel Doors and Grille
611/P-3	30” Wide, Over/Under, Platinum Stainless Steel Doors and Grille

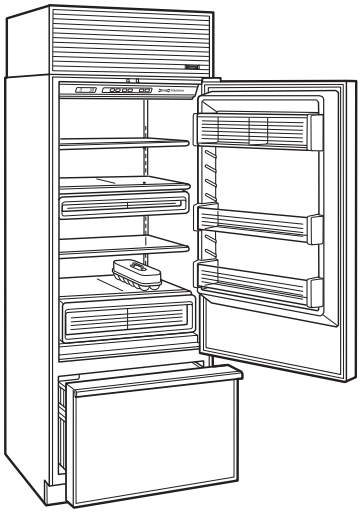

Model 611-3

MODEL	DESCRIPTION
611G/F-3	30” Wide, Over/Under, Glass Refrig Door, Framed Door trim w/Handles, Louver Grille (Standard)
611HAG/F-3	*(Same as above with High Altitude Glass)*
611G/O-3	30” Wide, Over/Under, Glass Refrig Door, Overlay Door Trim without handles, Panel Grille (Standard)
611HAG/O-3	*(Same as above with High Altitude Glass)*
611G/S-3	30” Wide, Over/Under, Glass Refrig Door, Classic Stainless Steel Door and Grille
611HAG/S-3	*(Same as above with High Altitude Glass)*
611G/B-3	30” Wide, Over/Under, Glass Refrig Door, carBon Stainless Steel Door and Grille
611HAG/B-3	*(Same as above with High Altitude Glass)*
611G/P-3	30” Wide, Over/Under, Glass Refrig Door, Platinum Stainless Steel Door and Grille
611HAG/P-3	*(Same as above with High Altitude Glass)*

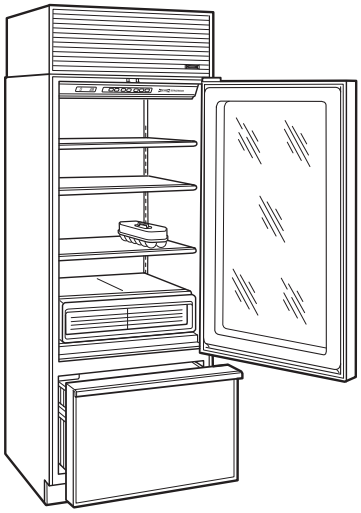

Model 611G-3

MODEL	DESCRIPTION
632/F-3	48” Wide, Side-by-Side, Framed Door Trim with Handles, Louver Grille (Standard)
632/O-3	48” Wide, Side-by-Side, Overlay Door Trim without Handles, Panel Grille (Standard)
632/S-3	48” Wide, Side-by-Side, Classic Stainless Steel Door and Grille
632/B-3	48” Wide, Side-by-Side, carBon Stainless Steel Door and Grille
632/P-3	48” Wide, Side-by-Side, Platinum Stainless Steel Door and Grille

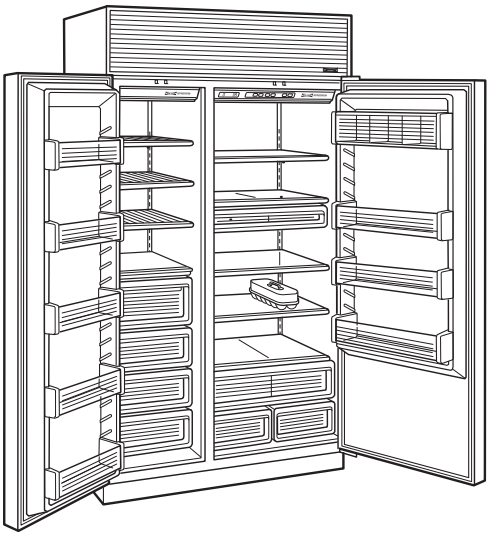

Model 632-3

MODEL	DESCRIPTION
642/F-3	42” Wide, Side-by-Side, Framed Door Trim with Handles, Louver Grille (Standard)
642/O-3	42” Wide, Side-by-Side, Overlay Door Trim without Handles, Panel Grille (Standard)
642/S-3	42” Wide, Side-by-Side, Classic Stainless Steel Door and Grille
642/B-3	42” Wide, Side-by-Side, carBon Stainless Steel Door and Grille
642/P-3	42” Wide, Side-by-Side, Platinum Stainless Steel Door and Grille

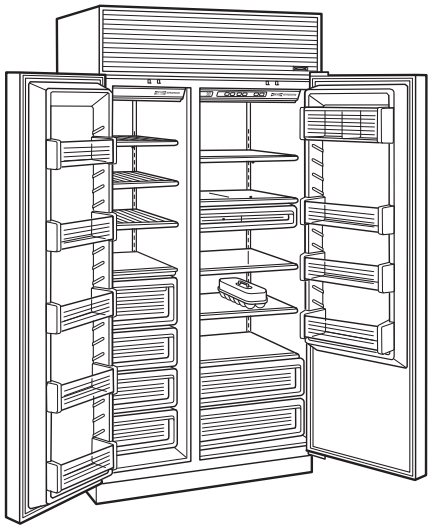

Model 642-3

MODEL	DESCRIPTION
650/F-3	36” Wide, Over/Under, Framed Door Trim with handles, Louver Grille (Standard)
650/O-3	36” Wide, Over/Under, Overlay Door Trim without handles, Panel Grille (Standard)
650/S-3	36” Wide, Over/Under, Classic Stainless Steel Doors and Grille
650/B-3	36” Wide, Over/Under, carBon Stainless Steel Doors and Grille
650/P-3	36” Wide, Over/Under, Platinum Stainless Steel Doors and Grille

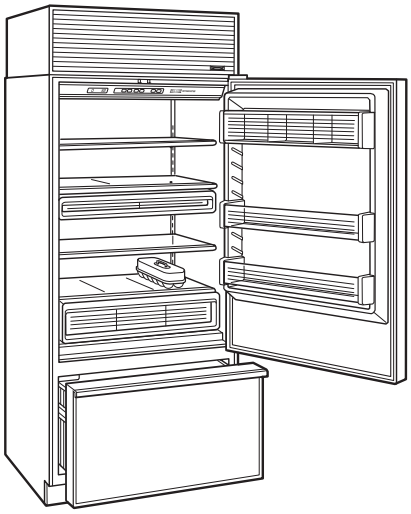

Model 650-3

MODEL	DESCRIPTION
650G/F-3	36” Wide, Over/Under, Glass Refrig Door, Framed Door trim w/Handles, Louver Grille (Standard)
650HAG/F-3	*(Same as above with High Altitude Glass)*
650G/O-3	36” Wide, Over/Under, Glass Refrig Door, Overlay Door Trim without handles, Panel Grille (Standard)
650HAG/O-3	*(Same as above with High Altitude Glass)*
650G/S-3	36” Wide, Over/Under, Glass Refrig Door, Classic Stainless Steel Door and Grille
650HAG/S-3	*(Same as above with High Altitude Glass)*
650G/B-3	36” Wide, Over/Under, Glass Refrig Door, carBon Stainless Steel Door and Grille
650HAG/B-3	*(Same as above with High Altitude Glass)*
650G/P-3	36” Wide, Over/Under, Glass Refrig Door, Platinum Stainless Steel Door and Grille
650HAG/P-3	*(Same as above with High Altitude Glass)*

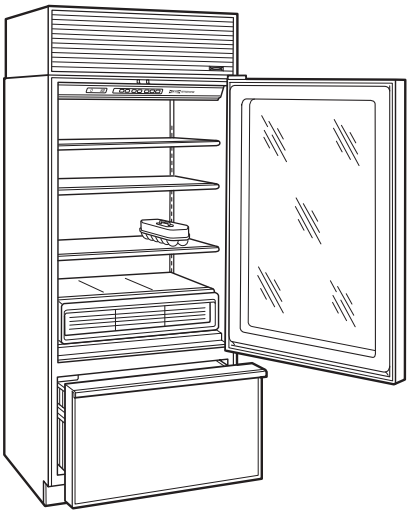

Model 650G-3

MODEL	DESCRIPTION
661/F-3	36” Wide, Side-by-Side, Framed Door Trim with Handles, Louver Grille (Standard)
661/O-3	36” Wide, Side-by-Side, Overlay Door Trim without Handles, Panel Grille (Standard)
661/S-3	36” Wide, Side-by-Side, Classic Stainless Steel Door and Grille
661/B-3	36” Wide, Side-by-Side, carBon Stainless Steel Door and Grille
661/P-3	36” Wide, Side-by-Side, Platinum Stainless Steel Door and Grille

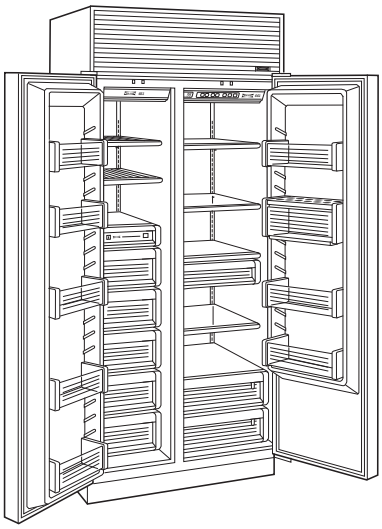

Model 661-3

MODEL	DESCRIPTION
685/F-3	42” Wide, Side-by-Side, Ice/Water Dispenser, Framed Trim w/Handles, Louver Grille (Standard)
685/O-3	42” Wide, Side-by-Side, Ice/Water Dispenser, Overlay Trim w/o Handles, Panel Grille (Standard)
685/S-3	42” Wide, Side-by-Side, Ice/Water Dispenser, Classic Stainless Steel Door and Grille
685/B-3	42” Wide, Side-by-Side, Ice/Water Dispenser, carBon Stainless Steel Door and Grille
685/P-3	42” Wide, Side-by-Side, Ice/Water Dispenser, Platinum Stainless Steel Door and Grille

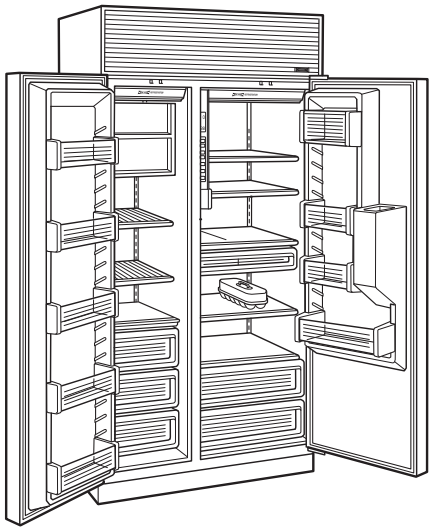

Model 685-3

MODEL	DESCRIPTION
695/F-3	48” Wide, Side-by-Side, Ice/Water Dispenser, Framed Trim w/Handles, Louver Grille (Standard)
695/O-3	48” Wide, Side-by-Side, Ice/Water Dispenser, Overlay Trim w/o Handles, Panel Grille (Standard)
695/S-3	48” Wide, Side-by-Side, Ice/Water Dispenser, Classic Stainless Steel Door and Grille
695/B-3	48” Wide, Side-by-Side, Ice/Water Dispenser, carBon Stainless Steel Door and Grille
695/P-3	48” Wide, Side-by-Side, Ice/Water Dispenser, Platinum Stainless Steel Door and Grille

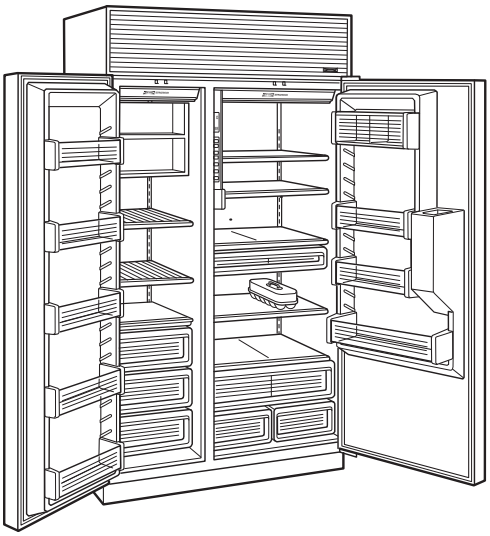

Model 695-3

INSTALLATION CONSIDERATIONS

This section covers common installation issues seen by Service Technicians. Improper installation, though not a valid service issue, has the potential to lead to a call for service. Installation related complaints could include, but are not limited to: Unit leveling, unit movement, door misalignment, improper door and drawer sealing, internal frost or condensation, exterior condensation, warm compartment temperatures, etc.

NOTE: *If additional installation information is needed, refer to the complete Installation Guide, or contact Sub-Zero Service Department.*

⚠ WARNING

IF UNIT IS UNDER A SOLID SOFFIT AND CLEARANCE BETWEEN SOFFIT AND TOP OF UNIT IS GREATER THEN 1" (25 mm), OR IF UNIT IS NOT UNDER SOLID SOFFIT, UNIT COULD TIP FORWARD UNDER CERTAIN LOAD CONDITIONS. FAILURE TO INSTALL ANTI-TIP COMPONENTS AND EXTEND LEVELERS TO FLOOR ACCORDING TO INSTALLATION MANUAL COULD RESULT IN SERIOUS INJURY OR DEATH.

Anti-Tip Components Installation (All Models)

If anti-tip components (aka wood block / blocking kit) need be installed, follow these steps:

NOTE: *These directions are supplied with each anti-tip package.*

1. Locate and mark two wall studs at back of unit installation location (See Figure 2-1).
2. Identify and mark proper height to clear unit top. Space between unit top and bottom of wood block must NOT be more then 1/4" (6 mm) (See Figure 2-1).
3. Using the L-brackets and screws provided, secure wood block to wall studs, located in step 1, making sure screws extend 7/8" (22 mm) into each wall stud. The wood block must extend a minimum of 3" (76 mm) over unit (See Figure 2-1).
4. Utilizing front and rear levelers, raise and level unit until it contacts wood block.
5. Refer to Installation Guide provided with the unit for any additional information needed.

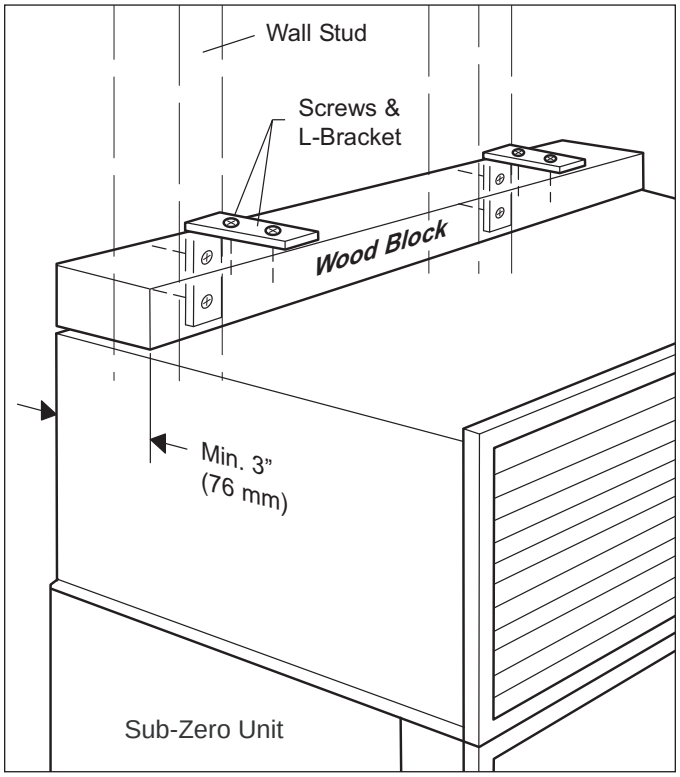

Figure 2-1. Anti-Tip Components

Dual Unit Installations

⚠ CAUTION

In high humidity areas, if two or more units are placed side by side and are 2" (51 mm) or less apart, a dual unit heater package should be applied to the left side of the right-hand unit. Failure to install the dual unit heater package could result in exterior condensation between the units.

- Sales Accessory part #TTDUAL should be utilized. (See Figure 2-2)

  NOTE: *Complete installation instructions are supplied with the #TTDUAL package.*

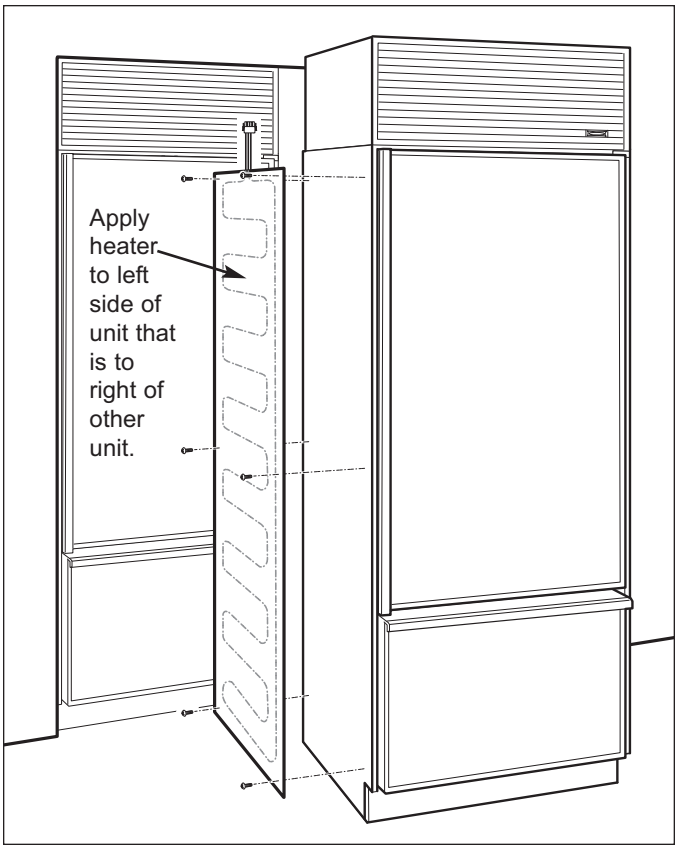

Figure 2-2. Dual Unit Heater

Unit Leveling (All Models)

NOTE: *Unit must be installed before final leveling. If unit is anchored to cabinets, remove anchor screws before leveling, reinstalled after.*

1. To level unit, first remove kickplate (See Figure 2-3).
2. To raise unit front, turn front leveler legs counterclockwise, clockwise to lower (See Figure 2-4).
3. At front of unit base is an adjusting screw that reaches to rear leveler/roller assembly. To raise unit rear, use 5/16" socket wrench to turn adjusting screw clockwise to raise, counterclockwise to lower (See Figure 2-4).

NOTE: *Level is best checked at top & side mainframe.*

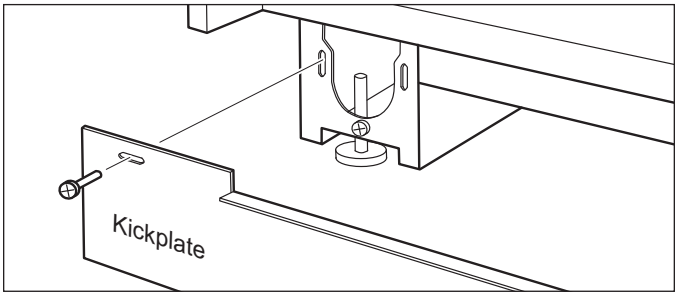

Figure 2-3. Kickplate Removal

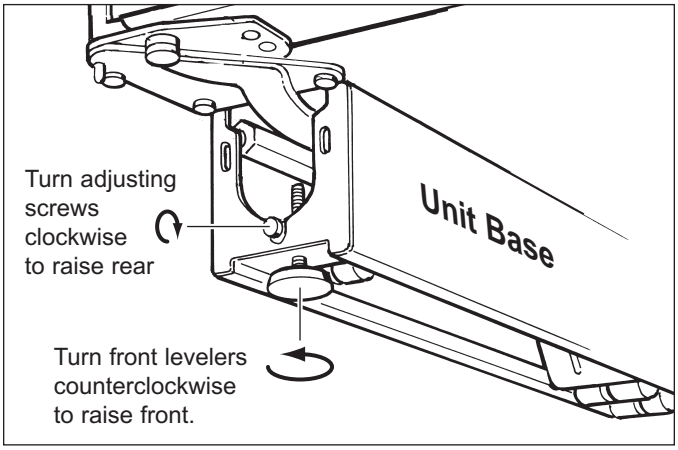

Figure 2-4. Unit Leveling

Door Adjustment (All Models)

NOTE: *Unit must be level before adjusting doors.*

If unit is properly installed, blocked and leveled, it may still be necessary to adjust door(s) left to right and/or in and out. Adjustments are performed at top and/or bottom door hinge(s).

1. Working on only one hinge at a time (top or bottom), remove and discard two small Phillips head shipping screws from door hinge before attempting adjustments (See Figure 2-5).
2. Loosen and re-snug door hinge mounting screws, allowing door adjustment (See Figure 2-5).
3. After adjusting door, tighten door hinge mounting screws and check for proper door seal.

NOTE: *If one door on a side-by-side unit sits higher than the other, bottom hinge shim (part #0183100) is available. To install shim, remove shipping screws from bottom door hinge, then loosen hinge mounting screws. Insert shim(s) between bottom door hinge and bottom door trim. Adjust door accordingly and retighten door hinge screws (See Figure 2-6).*

Also see Special Side-by-Side Door Adjustment instructions on following page.

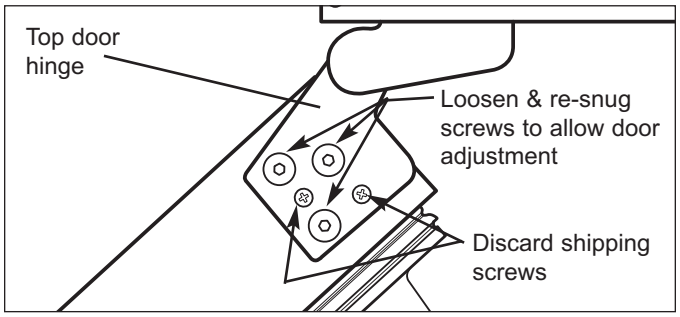

Figure 2-5. Top Door Hinge & Screws

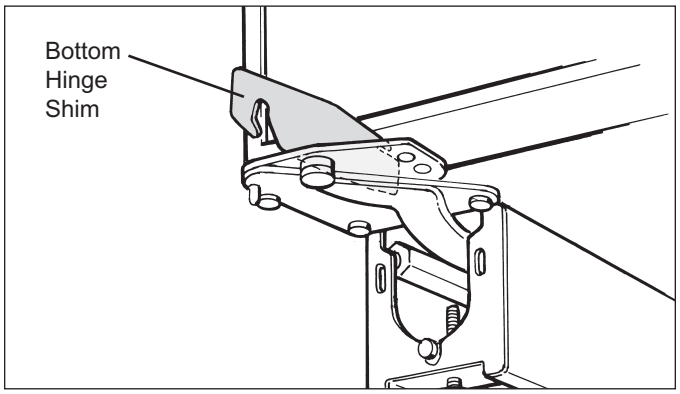

Figure 2-6. Bottom Hinge Shim Installation

Special Side-by-Side Door Adjustment

Occasionally after a side-by-side unit is properly installed, blocked and leveled, the refrigerator door top may stick out farther then the freezer door top, even though the bottom of each door is flush. The adjustment procedure listed below explains how to correct this. (For video showing this procedure, order part #3756530)

NOTE: *Unit must be level before adjusting doors.*

Special Side-by-Side Door Adjustment Procedure:

1. First - Adjust Refrigerator Door Bottom Hinge OUT:

a. Extract shipping screws from refrigerator door bottom hinge. Then, loosen & re-snug bottom hinge mounting screws.

b. Pull refrigerator door bottom hinge corner out to outer most limit & tighten hinge mounting screws.

NOTE: *Check door gasket seal by refrigerator door bottom hinge. If gasket is not sealing, loosen & re-snug mounting screws, and push refrigerator door bottom hinge corner in slightly until gasket seals.*

c. Check door alignment. If refrigerator door top still sticks out farther then freezer door, perform second adjustment.

2. Second - Adjust Refrigerator Door Top Hinge IN:

a. With a pencil, trace location of refrigerator door top hinge for reference. Extract shipping screws from refrigerator door top hinge, then loosen & re-snug top door hinge mounting screws.

b. Push refrigerator door top hinge corner in to inner most limit & tighten hinge mounting screws.

NOTE: *Check door gasket seal around refrigerator door. If gasket is not sealing, adjust accordingly.*

c. Check door alignment. If refrigerator door top still sticks out farther then freezer door, perform third adjustment.

3. Third - Adjust Freezer Door Top Hinge OUT:

a With a pencil, trace location of freezer door top hinge for reference. Extract shipping screws from freezer door top hinge, then loosen & re-snug top door hinge mounting screws.

b. Pull freezer door top hinge corner out to outer most limit & tighten hinge mounting screws.

NOTE: *Check door gasket seal by freezer door top hinge. If gasket is not sealing, loosen & re-snug mounting screws, and push freezer door top hinge corner in slightly until gasket seals.*

c. Check door alignment. If refrigerator door top still sticks out farther then freezer door, perform fourth adjustment.

4. Fourth - Adjust Freezer Door Bottom Hinge IN:

a. Extract Phillips head shipping screws from freezer door bottom hinge. Then, loosen & re-snug bottom door hinge mounting screws.

b. Push freezer door bottom hinge corner in to inner most limit & tighten hinge mounting screws.

NOTE: *Check door gasket seal around freezer door. If gasket is not sealing, adjust accordingly.*

c. Check door alignment. Minor adjustments may still be needed at this point, adjust accordingly.

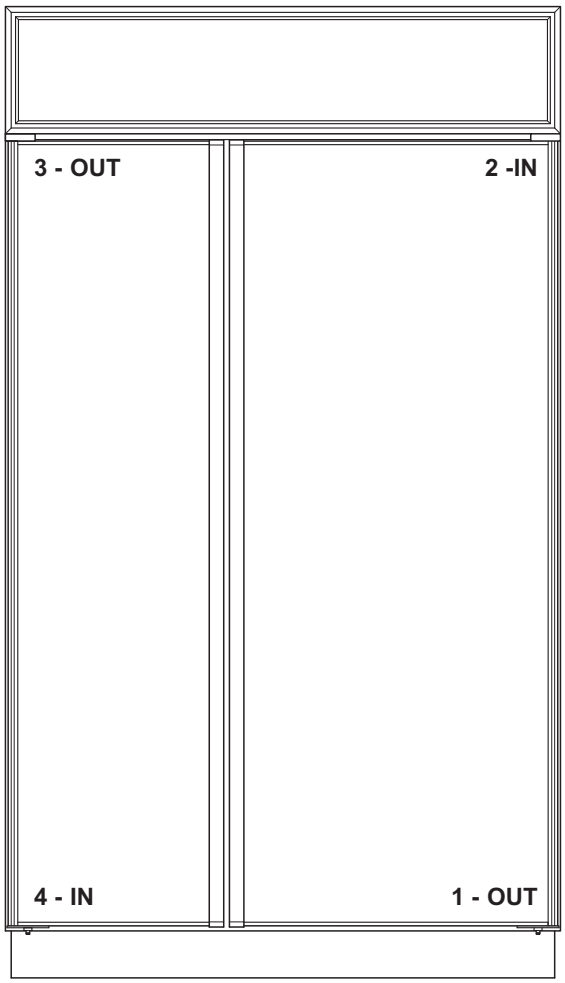

Figure 2-7. Special Side-by-Side Door Adjustment

Door Panel Installation (All Framed and Overlay Models)

1. Using a piece of tape stuck to magnetic trim molding center, pull trim molding out at midpoint to expose handle/trim mounting screws (See Figure 2-8).
2. Extract mounting screws and handle/trim from door (See Figure 2-9).
3. Slide door panel into door frame (See Figure 2-10), then reinstalling handle/trim and magnetic trim molding.

NOTE: *On dispenser models, the glass well bezel will also need to be removed from door before sliding door panel into door frame. See Bezel removal instructions in section 7 of this manual.*

NOTE: *If door panel is less than 1/4" (6 mm) thick, a filler panel must be installed behind door panel.*

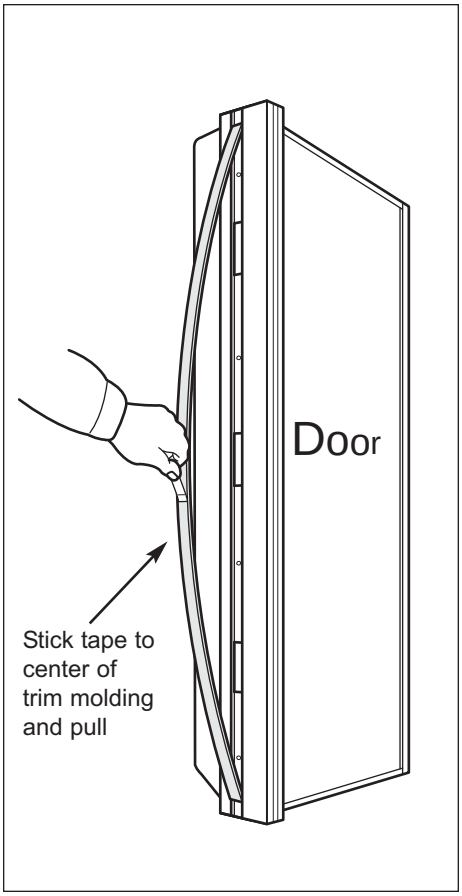

Figure 2-8. Molding Removal

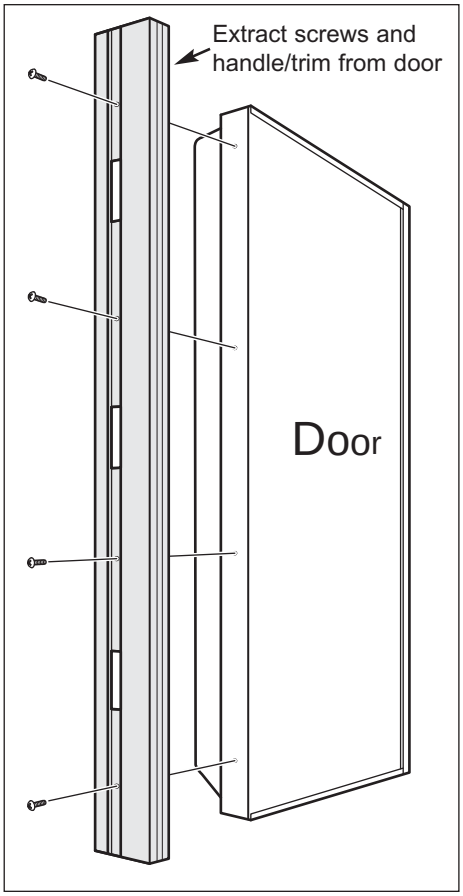

Figure 2-9. Handle/Trim Removal

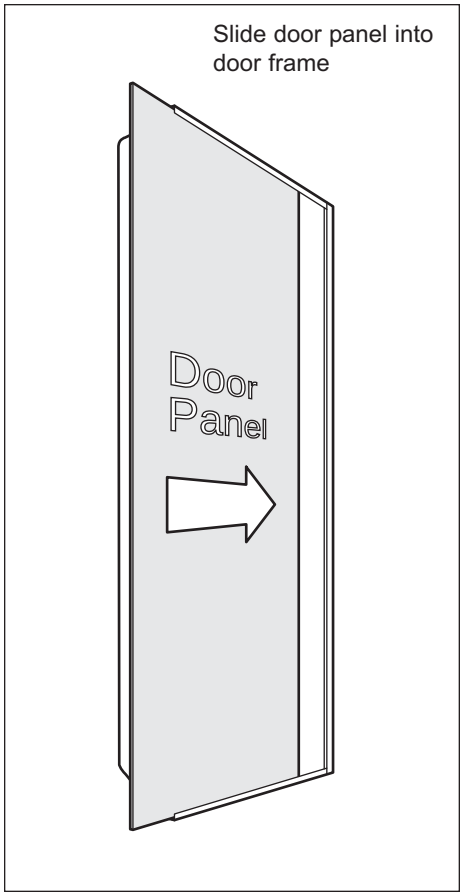

Figure 2-10. Door Panel Install

90° Door Stop Pin Installation (611-3, 650-3)

Part #3550770, 90° Door Stop Pin, is supplied with models 611 and 650. To install:

a Remove unit grille.

b. With door closed, insert door stop pin down into threaded hole in top cabinet hinge and tighten (See Figure 2-11). Then, reinstall unit grille.

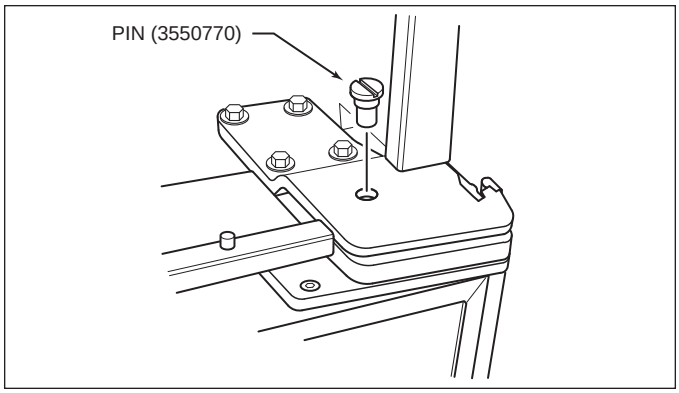

Figure 2-11. 90° Stop Pin (611-3, 650-3)

90° Door Stop Pin Installation (611G-3, 650G-3)

Part #3550770, 90° Door Stop Pin, is supplied with models 611G and 650G. To install:

a Open freezer drawer.

b. Insert door stop pin up into threaded hole in lower cabinet hinge and tighten (See Figure 2-12).

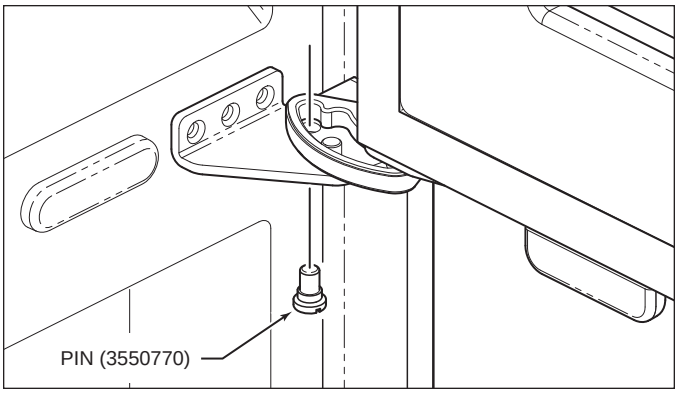

Figure 2-12. 90° Stop Pin (611G-3, 650G-3)

90° Door Stop Cam Installation (632-3, 642-3, 661-3, 685-3, 695-3)

Optional 90° door stop cam (part #DS90 or #IDS90) and 105° door stop cam (part #DS105 or #IDS105) are available at no charge from Authorized Parts Distributors and Product Distributors. To install:

a With door closed, place door stop cam up over hinge pin, making sure stub on cam fits into hole in lower cabinet hinge (See Figure 2-13).

b. Secure door stop cam by pushing E-ring into groove at end of hinge pin (See Figure 2-13).

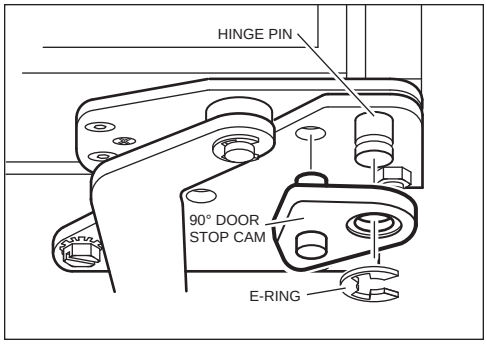

Figure 2-13. 90° Stop Cam

90° Door Stop Cam Installation (601R-3, 601RG-3, 601F-3)

Optional 90° door stop cam (part #DS90 or #IDS90) and 105° door stop cam (part #DS105 or #IDS105) are available at no charge from Authorized Parts Distributors and Product Distributors. To install:

a With door closed, extract bolts, stiffener plate and bushing from lower cabinet hinge (See Figure 2-14).

b. Place door stop cam up over hinge pin, making sure stub on cam fits into hole in lower cabinet hinge (See Figure 2-14).

c. Reinstall bushing, stiffener plate and bolts onto lower cabinet hinge (See Figure 2-14).

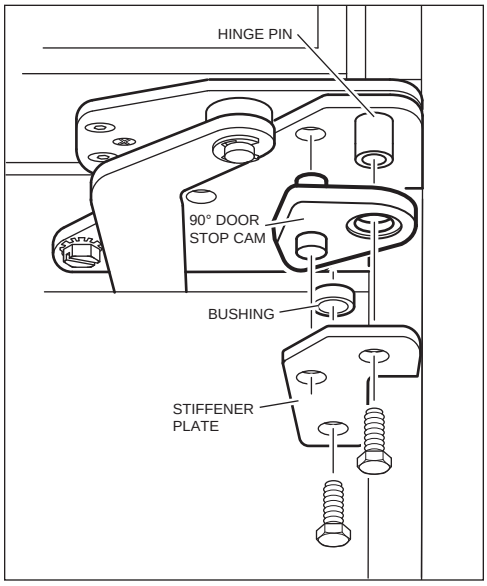

Figure 2-14. 90° Stop Cam

ELECTRONIC CONTROL TERMINOLOGY & COMPONENT DESCRIPTIONS

All 600-3 Series units utilize an electronic control system. The electronic control system monitors, regulates and controls a variety of functions. The electronic control system also displays temperature readings, ice maker system operation, possible problems with the unit and door ajar alarm status. The table below defines some basic electronic control system terminology and describes some of the electronic control system components. An understanding of the following information is needed in order to comprehend the input operations and functions of the electronic control system.

Term/Component	Definition / Description
Control Board	The printed-circuit board (PC Board) contains the microprocessor, relays and electrical connections which control and monitor all functions and operations of the unit.
Microprocessor	An electrical component on the control board which receives electrical signals from other components, processes that information, then sends an electrical signal to the relays on the board to open or close, and other electronic components in the unit to switch on or off.
Relay	The electrical components on the control board which switch other components in the unit ON and OFF when instructed to do so by the microprocessor.
LCD (Liquid Crystal Display)	That part of the control board seen at the control panel which displays compartment temperatures, service indicator, door ajar alarm bell & ice indicator.
Control Panel Assembly	The information input and read-out area of the electronic control system, located at the top of the upper Compartment.
Membrane Switch	An integral part of the control panel assembly, which consists of the function keys used for all input operations to the electronic control system.
Keys (Function Keys)	The buttons on the Membrane switch used for input operations. (The keys are: UNIT ON/OFF, ALARM ON/OFF, ICE ON/OFF, WARMER, COLDER)
Indicators	The words and numbers that are displayed at the control panel assembly. (Example: Temperature displays, alarm bell indicator, SERVICE indicator, and ICE system indicator)
Error Codes	The code numbers accompanied by the letters “EC” that appear on the LCD during diagnostic mode if the unit experienced specific problems related to electrical signals supplied by electrical components.
Display Units of Measure	Temperatures displayed at the LCD may be in fahrenheit units of measure (°F) or celsius units of measure (°C). A series of key strokes allows the temperature display units of measure to be switched to read as either °F or °C.
Set-Point	The desired compartment temperature, established by pressing the COLDER or WARMER keys.
High Offset (Cut-in)	As the compartment air temperature cycles up and down, the high offset is the maximum compartment temperature that the electronic control system will allow before calling for cooling.
Low Offset (Cut-out)	As the compartment air temperature cycles up and down, the low offset is the minimum compartment air temperature that the electronic control system will allow before interrupting cooling.
Thermistor (Temperature Sensor)	A resistor with which resistance changes as the temperature around it changes. For electronic control system purposes, the microprocessor measures this resistance and displays it as a temperature reading at the LCD.

BASIC ELECTRONIC CONTROL SYSTEM

This page contains a basic illustration of the 600-3 Series electronic control system (See Figure 3-1). Input operations for the electronic control system are performed at the membrane switch (part of the the control panel assembly), with monitoring, regulating and controlling functions taking place at the control board (located directly behind the control panel). Temperatures and possible problems with the unit are displayed at the control panel on the LCD. The entire electronic control system is described in greater detail on the following pages.

NOTE: *The diagram below is not an exact electrical representation of the electronic control system. For more detailed electrical diagrams refer to the wiring diagram and schematic supplied with the unit.*

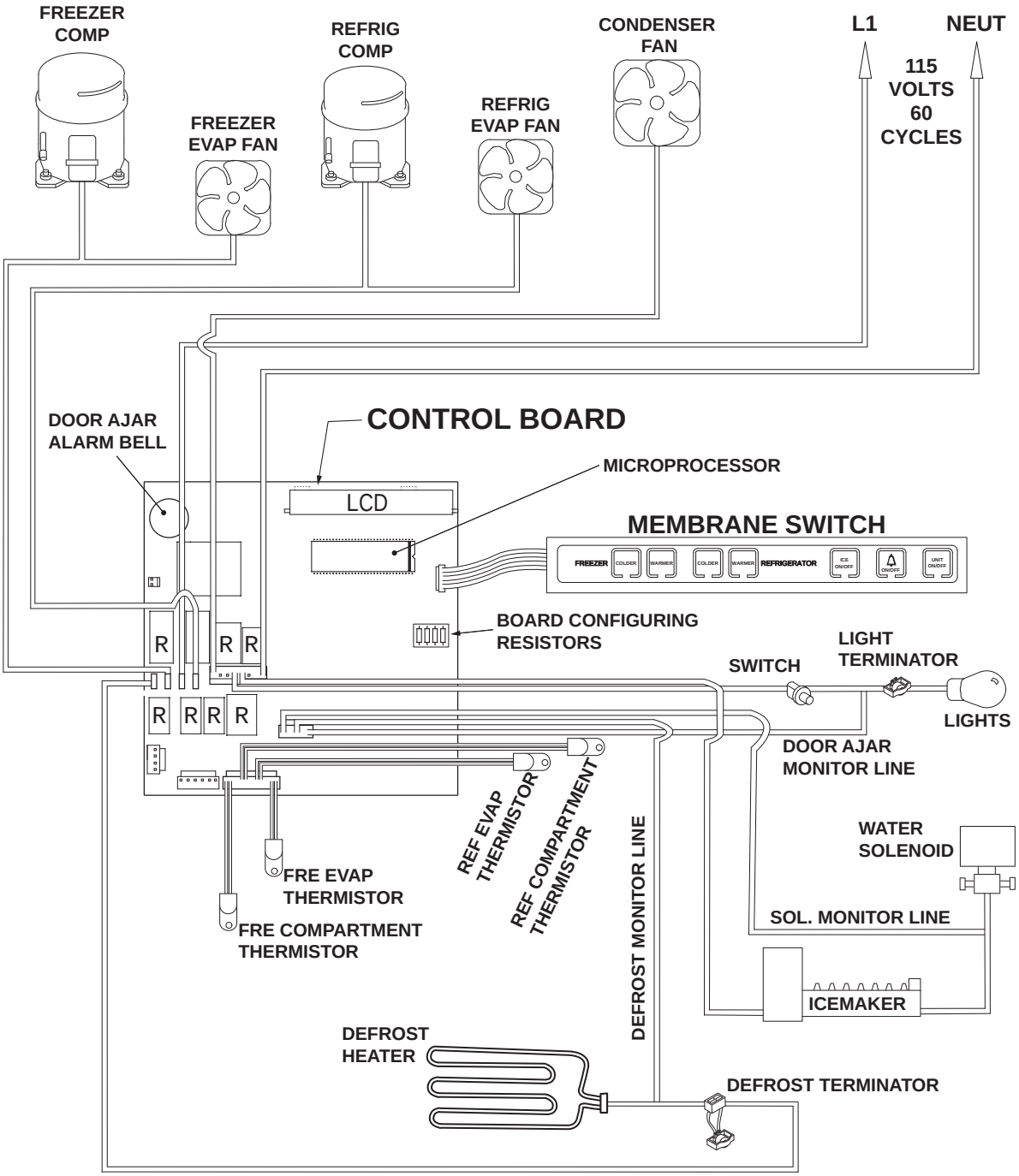

Figure 3-1. Basic 600-3 Series Electronic Control System Diagram

CONTROL BOARD LAYOUT AND SUMMARY TABLE

The electrical connection points on the control board are labeled alphanumerically. These labels correspond with the alphanumeric control board summary table, located on wiring diagrams. By referencing the summary table, it is possible to identify which components are connected at which connection points on the control board. Below is a layout diagram of the control board and a copy of a summary table (See Figures 3-2 & 3-3).

NOTE: *All components on control board are non-replaceable. If problems with control board are identified, the complete control board must be replaced.*

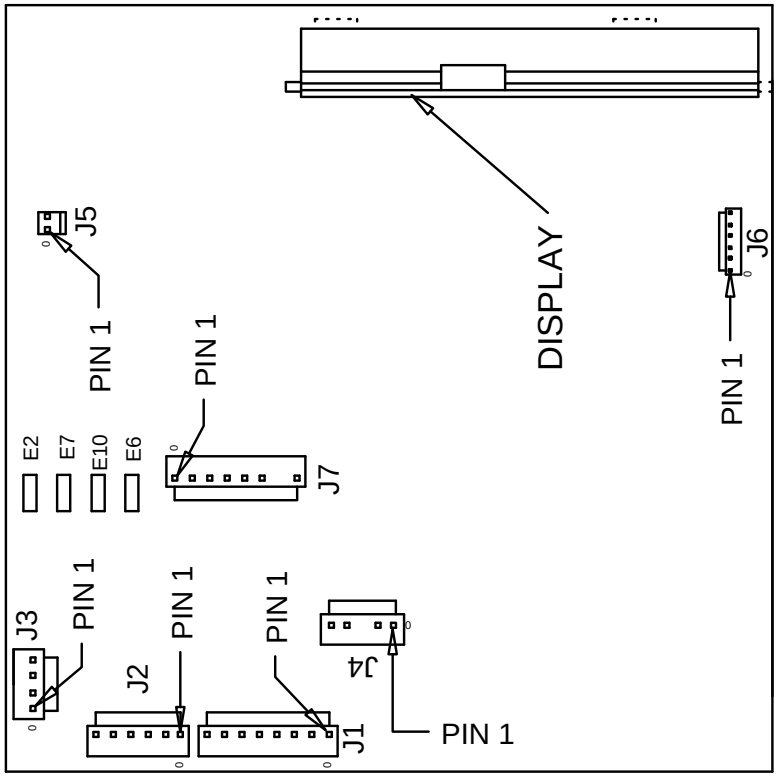

Figure 3-2. Control Board Layout

CONTROL BOARD SUMMARY				
	CIRCUIT	DESCRIPTION	FUNCTION	COLOR
120 VOLT CIRCUITS				
E2	DEF HTR	DEFROST HEATER	POWERS DEFROST CIRCUIT	BLUE
E7	FCOMP	FRZ COMPRESSOR	POWERS FRZ COMPRESSOR	PURPLE
E10	L1	POWER IN	POWER INTO BOARD	BLACK
E6	RCOMP	REF COMPRESSOR	POWERS REF COMPRESSOR	GRAY
J7-1	C FAN	CONDENSER FAN	POWERS CONDENSER FAN	WHITE/RED
J7-2	E FAN	NOT USED		
J7-3	I ACC	ICE MAKER ACC (FILL TUBE)	POWERS FILL TUBE HEATER AND ACCESSORIES	WHITE/BLUE
J7-4	LITE	LIGHTS	POWERS LIGHTS	YELLOW
J7-5	ICE	ICE MAKER	POWERS ICE MAKER	PINK
J7-6		NOT USED		
J7-7		NOT USED(NO PIN)		
J7-8	NEU	NEUTRAL	NEUTRAL INTO BOARD	WHITE
J4-1	F DR	FRZ DOOR LIGHT SENSE	SENSES IF FRZ DOOR OPEN	BROWN
J4-2	R DR	REF DOOR LIGHT SENSE	SENSES IF REF DOOR OPEN	ORANGE
J4-3		NOT USED(NO PIN)		
J4-4		DEF SENSOR	SENSES WHEN DEF HEATER SHUTS OFF	GRAY/WHITE
J4-5		ICE MAKER VALVE SENSOR	SENSES WATER VALVE ACTIVATION	TAN
LOW VOLTAGE THERMISTOR CIRCUITS				
J1-1	EVAP FRZ	FRZ EVAP	SENSES FRZ EVAP TEMP	ORANGE/RED
J1-2	EVAP FRZ	FRZ EVAP	SENSES FRZ EVAP TEMP	BLUE/RED
J1-3	EVAP REF	REF EVAP	SENSES REF EVAP TEMP	ORANGE/YELLOW
J1-4	EVAP REF	REF EVAP	SENSES REF EVAP TEMP	BLUE/YELLOW
J1-5	REF	REF COMPARTMENT	SENSES REF CABINET	BLUE/WHITE
J1-6	REF	REF COMPARTMENT	SENSES REF CABINET	BLUE/WHITE
J1-7	FRZ	FRZ COMPARTMENT	SENSES FRZ CABINET TEMP	BLUE/BLACK
J1-8	FRZ	FRZ COMPARTMENT	SENSES FRZ CABINET TEMP	BLUE/BLACK

Figure 3-3. Control Board Summary Table (632-3/642-3 Summary Table Shown)

CONTROL PANEL LAYOUT

NOTES:

- *The illustration below is of a 632-3 control panel (See Figure 3-4).*
- *The control panels in models 601R-3, 601RG-3 and 601F-3 lack the obvious keys and indicators illustrated below.*
- *The control panels in models 601RG-3, 611G-3 and 650G-3 include a LIGHTS ON/OFF key that is not shown in the illustration below.*
- *The control panels in models 685-3 and 695-3 are mounted vertically and include a BULK ICE key.*

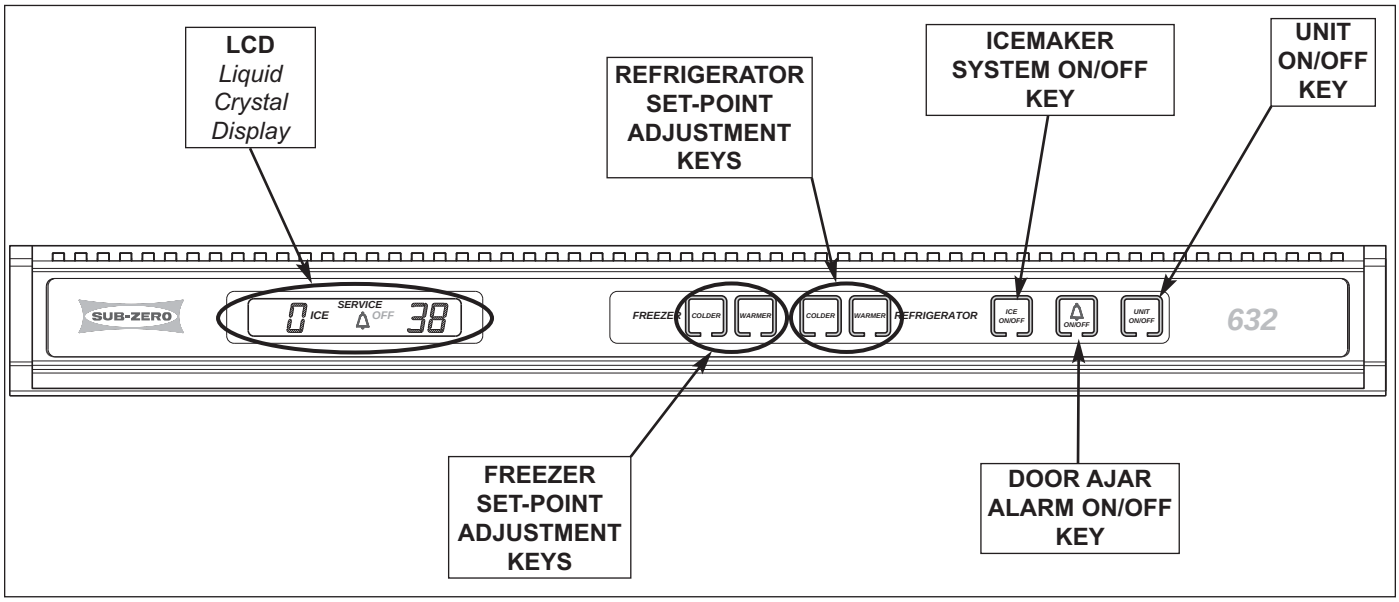

Figure 3-4. Control Panel Layout *(Model 632-3 Control Panel Shown)*

BASIC ELECTRONIC CONTROL INPUT OPERATIONS

The following pages describe the basic input operations performed at the control panel. The subjects covered are: switching unit ON and OFF; adjusting set-point (temperature adjustment); switching ice maker system ON and OFF; enabling and disabling door ajar alarm feature, and in models 601RG-3, 611G-3 and 650G-3 only, accent lighting system ON and OFF. Please note that though possible to display temperatures in Fahrenheit or Celsius, in most cases Fahrenheit readings are shown.

Unit ON/OFF

All units are shipped in OFF Mode. When power is supplied to the unit, a trace of the word "OFF" is visible on the LCD. By pressing and releasing the UNIT ON/OFF key (See Figure 3-5), power is allowed past the control board to the rest of the unit. This is indicated by the unit's lights energizing and LCD at the control panel illuminating with temperature readings.

NOTE: *Whenever the unit is switched OFF using the UNIT ON/OFF key, a trace of the word "OFF" will be visible on the LCD as long as there is power to the unit.*

⚠ WARNING

WHEN IN "OFF" MODE, 115 VOLTS AC IS STILL PRESENT AT CONTROL BOARD!

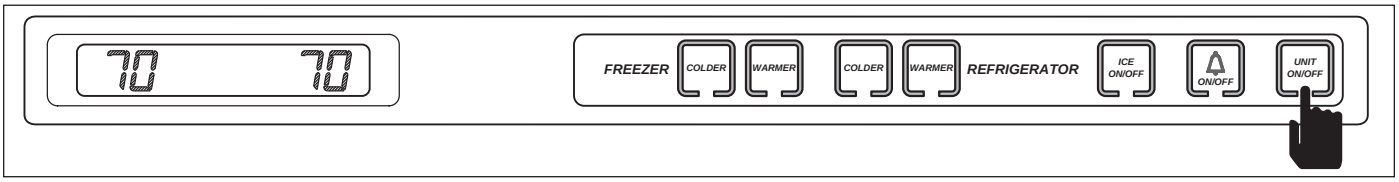

Figure 3-5. Switching Unit ON or OFF - Press UNIT ON/OFF Key

Adjusting Set-Point (Temperature Adjustment)

To adjust set-points, press WARMER or COLDER key on control panel in multiple key strokes until desired set-point is achieved (See Figure 3-6). One key stroke equals one degree change.

NOTE: *The temperature range in a freezer compartment is -5°F (-21°C) to +5°F (-15°C). The temperature range in a refrigerator compartment is +34°F (+1°C) to +45°F (+7°C).*

NOTE: *The initial stroke of the WARMER or COLDER key will change the previous set-point by one degree.*

NOTE: *The set-point will be displayed on the LCD for 10 seconds after the last key stroke. After the 10 second delay, the compartment temperature will be displayed. As the compartment temperature changes, the temperature displayed on the LCD will change by no more than one degree per minute.*

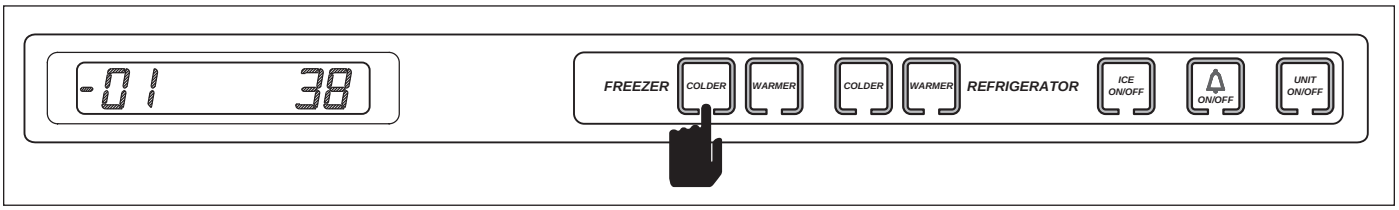

Figure 3-6. Adjusting Set-Point - Press WARMER or COLDER Key In Multiple Key Strokes

Icemaker System ON/OFF

All 600-3 Series units with freezer compartments are equipped with an icemaker. When the unit first arrives in a home, the icemaker system is off. By pressing and releasing the ICE ON/OFF key on the control panel, power is allowed to the icemaker system and "ICE" appears on the LCD (See Figure 3-7). To switch the icemaker system off, press and release the ICE ON/OFF key again and the "ICE" indicator disappears from the LCD, indicating the icemaker system is off.

NOTE: *When in "Sabbath Mode," the icemaker system is deactivated. Sabbath Mode will be explained later.*

NOTE: *To allow ice to freeze fully and reduce effects of low water pressure, power to the icemaker system is interrupted for 45 minutes after each ice harvest. This can be bypassed for service purposes by switching the icemaker system OFF, then back ON with the ICE ON/OFF key.*

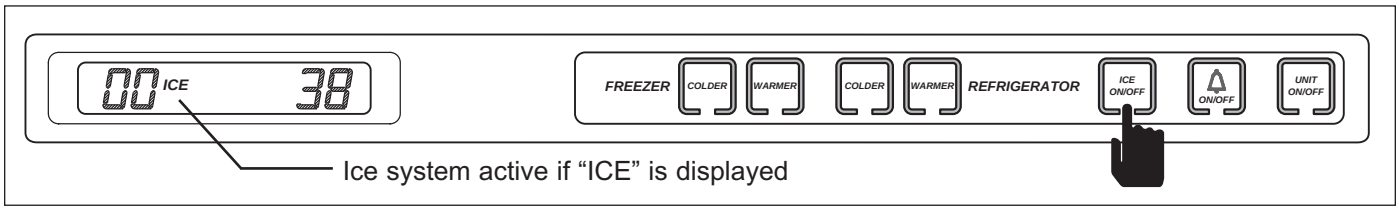

Figure 3-7. Switching Icemaker System ON or OFF - Press ICE ON/OFF Key

Door Ajar Alarm Feature (🔔) ON/OFF

All units are equipped with a door ajar alarm feature. To enable the door ajar alarm, press and release the Alarm Bell ON/OFF key on the control panel (See Figure 3-8). The bell indicator appears on the LCD indicating the alarm feature is active. With the alarm enabled, the bell indicator will flash and an audible alarm will beep whenever the door is left open for more then thirty seconds. To disable the door ajar alarm, press the Alarm Bell ON/OFF key again and the bell indicator disappears from the LCD, indicating the alarm feature is inactive.

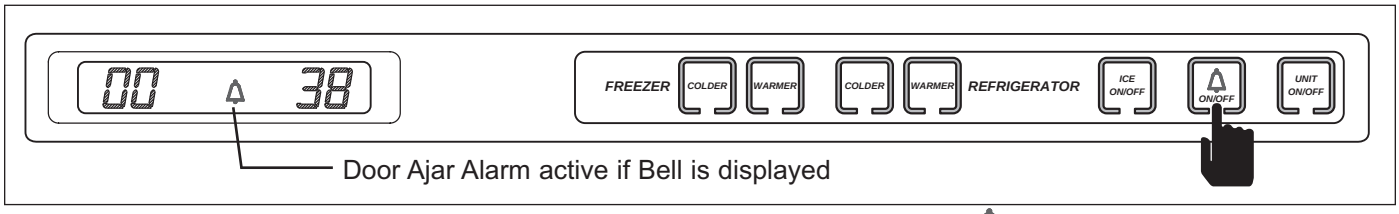

Figure 3-8. Switching Door Ajar Alarm ON or OFF - Press (🔔)ON/OFF Key

Accent Lighting System ON/OFF (Models Produced with Glass Doors Only)

Models produced with glass doors are equipped with an accent lighting system. To energize the accent lighting system, press the LIGHTS ON/OFF key (See Figure 3-9). With the accent lighting system energized, three low intensity light strips (15 Watts each), will stay illuminated when the door is closed. To disable the accent lights, press the LIGHTS ON/OFF key again.

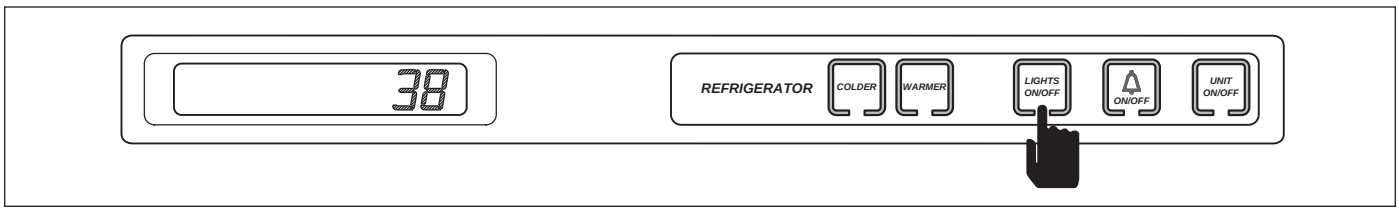

Figure 3-9. Accent Lighting System ON or OFF - Press LIGHTS ON/OFF Key
(Model 601RG-3 Control Panel Shown)

FUNCTIONS OF THE ELECTRONIC CONTROL SYSTEM

The following pages explain monitoring, regulating and controlling functions of the electronic control system. In most cases signal traces on a model 632-3 wiring schematic are used to show current flow for functions being explained.

Supply Power to the Lighting System

115 Volts AC are supplied to the lighting system through the control board when the unit is switched ON by pressing the UNIT ON/OFF key. With the doors open, the light switches allows power to the lights (See Figure 3-10).

NOTE: *115 Volt AC signal to the lights is monitored by the microprocessor to control the door ajar alarm feature.*

NOTE: *If in Sabbath Mode, th lighting system is disabled. Sabbath Mode will be covered later.*

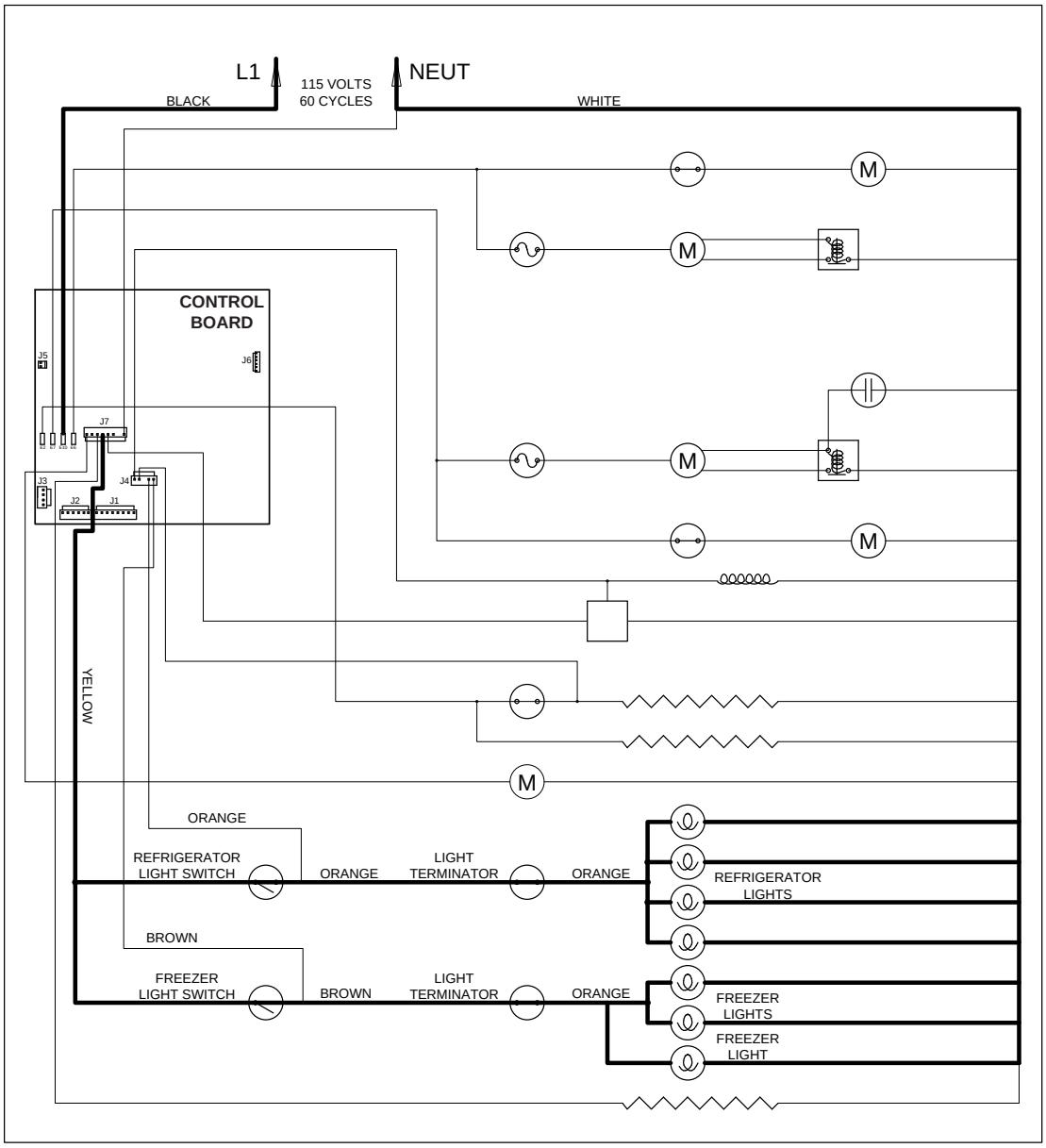

Figure 3-10. Signal Trace Schematic of Lighting System

Monitor, Regulate and Display Compartment Temperatures

Temperature signals from thermistors in refrigerator and freezer compartments are monitored, then displayed on the LCD. When a compartment reaches high offset temperature (calling for cooling), the compressor and evaporator fan are switched on. (See Figure 3-11). When a compartment reaches low offset temperature, the compressor and evaporator fan are switched off. Though compartment air temperature fluctuates from off and on cycles, the "average" temperature is displayed. (See Figure 3-12)

NOTE: *Freezer compartment temperature range is -5°F (-21°C) to +5°F (-15°C). Refrigerator compartment temperature range is +34°F (+1°C) to +45°F (+7°C).*

NOTE: *If average compartment temperature changes, the display will change by one degree per minute.*

NOTE: *A refrigerator compressor will not energize after a refrigerator off-cycle defrost unless the evaporator thermistor detects temperatures 38°F (3°C), or above.*

NOTE: *After a freezer evaporator defrost, the freezer compressor is not energized until after the 5 minute time delay/dwell that follows all freezer defrosts.*

NOTE: *If a refrigerator compartment thermistor is faulty, the refrigerator compressor defaults to 20 minutes on, 40 minutes off cycling, EE appears at right in LCD, SERVICE flashes and Error Code 05 is logged.*

NOTE: *If a refrigerator evaporator thermistor is faulty, the refrigerator compressor will not energize until compartment air temperature exceeds high offset by 5°F (3°C). SERVICE flashes and Error Code 06 is logged.*

NOTE: *If a freezer compartment thermistor is faulty, the freezer compressor defaults to 20 minutes on, 20 minutes off cycling, EE appears at left in LCD, SERVICE flashes and Error Code 07 is logged.*

NOTE: *If in Sabbath Mode, the compartment thermistors still control compressor operation, except that when high offset is reached, there is a random 15 to 25 second delay before compressors are energized.*

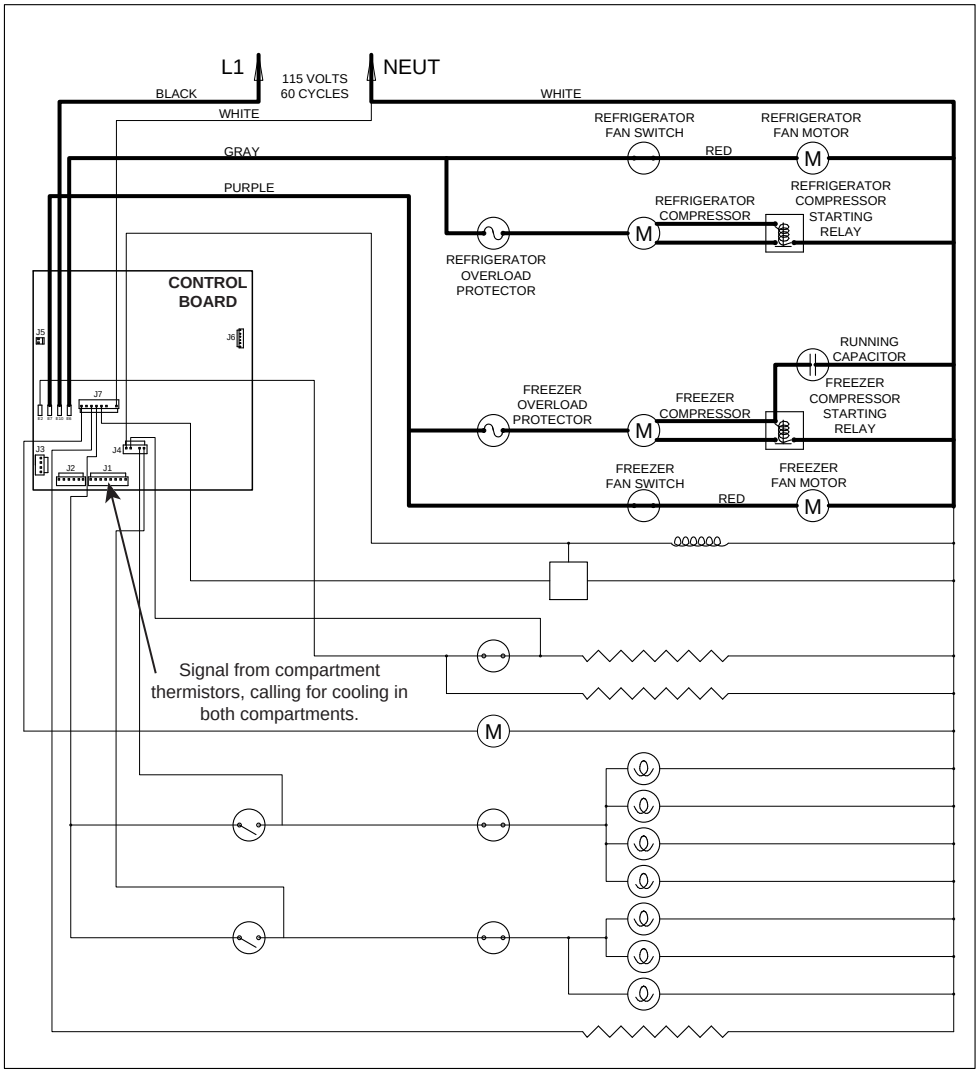

Figure 3-11. Signal Trace (High Voltage Only) Regulating Temperatures

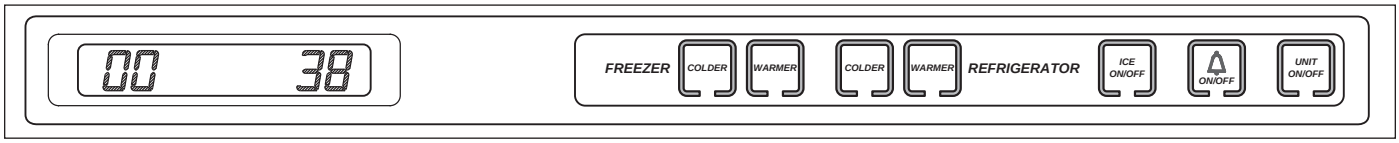

Figure 3-12. Average Compartment Temperature Displayed on LCD

Control Condenser Fan Operation

The microprocessor senses the 115 volt AC output to both compressors. If either compressor is running, a signal is sent to the condenser fan relay on the control board to close, supplying power to the condenser fan (See Figure 3-13). If both compressors are off, the condenser fan will be off.

NOTE: *In single compressor models (601R-3, 601RG-3, 601F-3), power to the condenser fan is supplied by the compressor circuit. The white/red wire from the control board will not be present in those models.*

NOTE: *In models 611G-3 and 650G-3, the condenser fan relay also controls the door heater.*

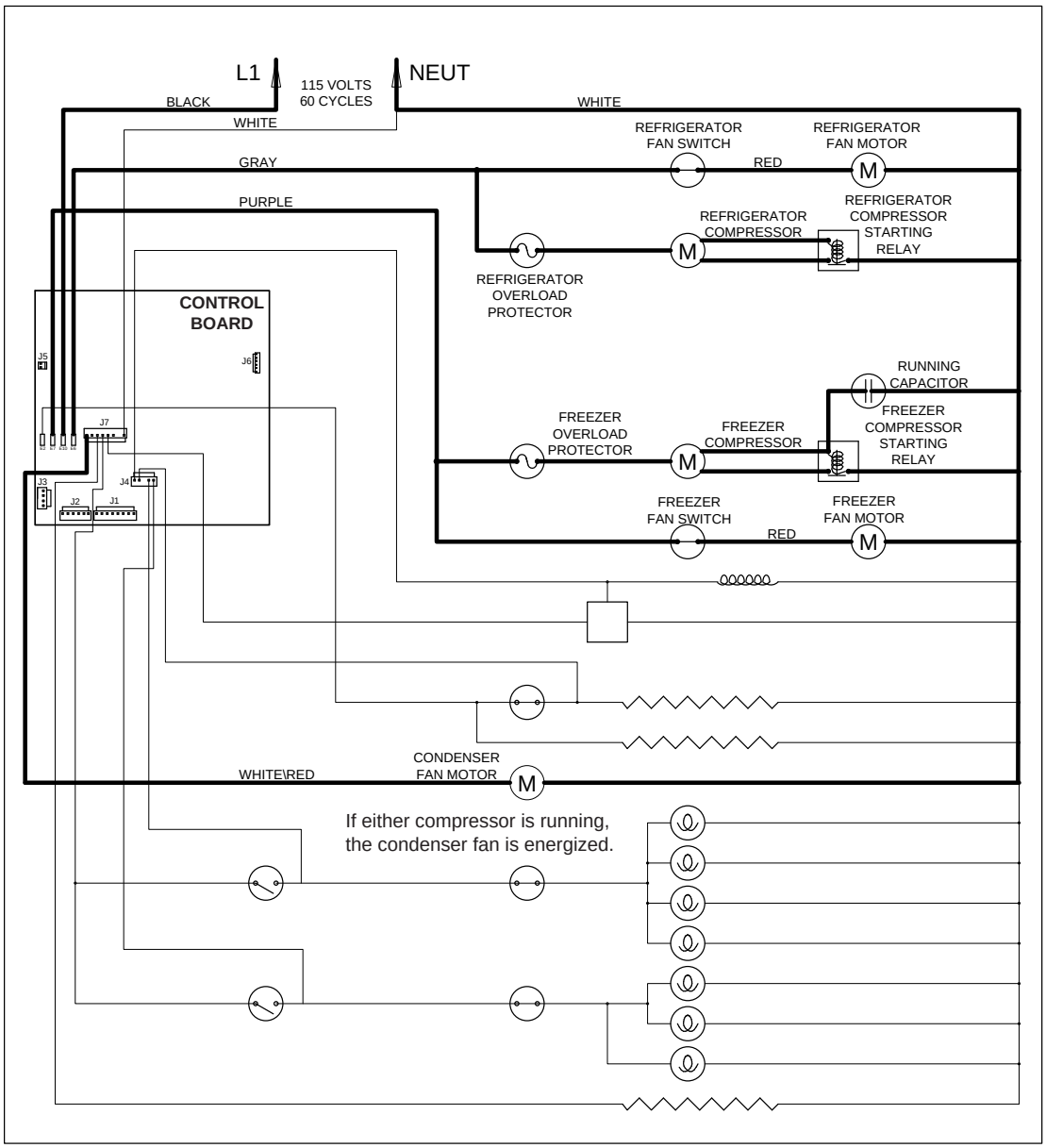

Figure 3-13. Signal Trace Schematic of Condenser Fan Operation

Minimize Condensation on Refrigerator Door Glass (Models Produced with Glass Doors Only)

On models produced with glass doors, the refrigerator door is equipped with a 5 watt braided wire heater around the glass perimeter to help minimize condensation formation on the glass.

- The heater in a 601RG-3 door is on 100%.
- The heater in 611G-3 and 650G-3 doors is tied into the condenser fan circuit (see Control Condenser Fan Operation on preceding page and Figure 3-14 below).

To help minimize condensation on the glass further, the microprocessor detects when the refrigerator door is opened, via the light switch, then when the door closes, the evaporator fan is energized for 5 minutes. This draws any warmer moist air away from the door glass. (See Figure 3-14)

NOTE: *The evaporator fan in these models also cycles with the compressor.*

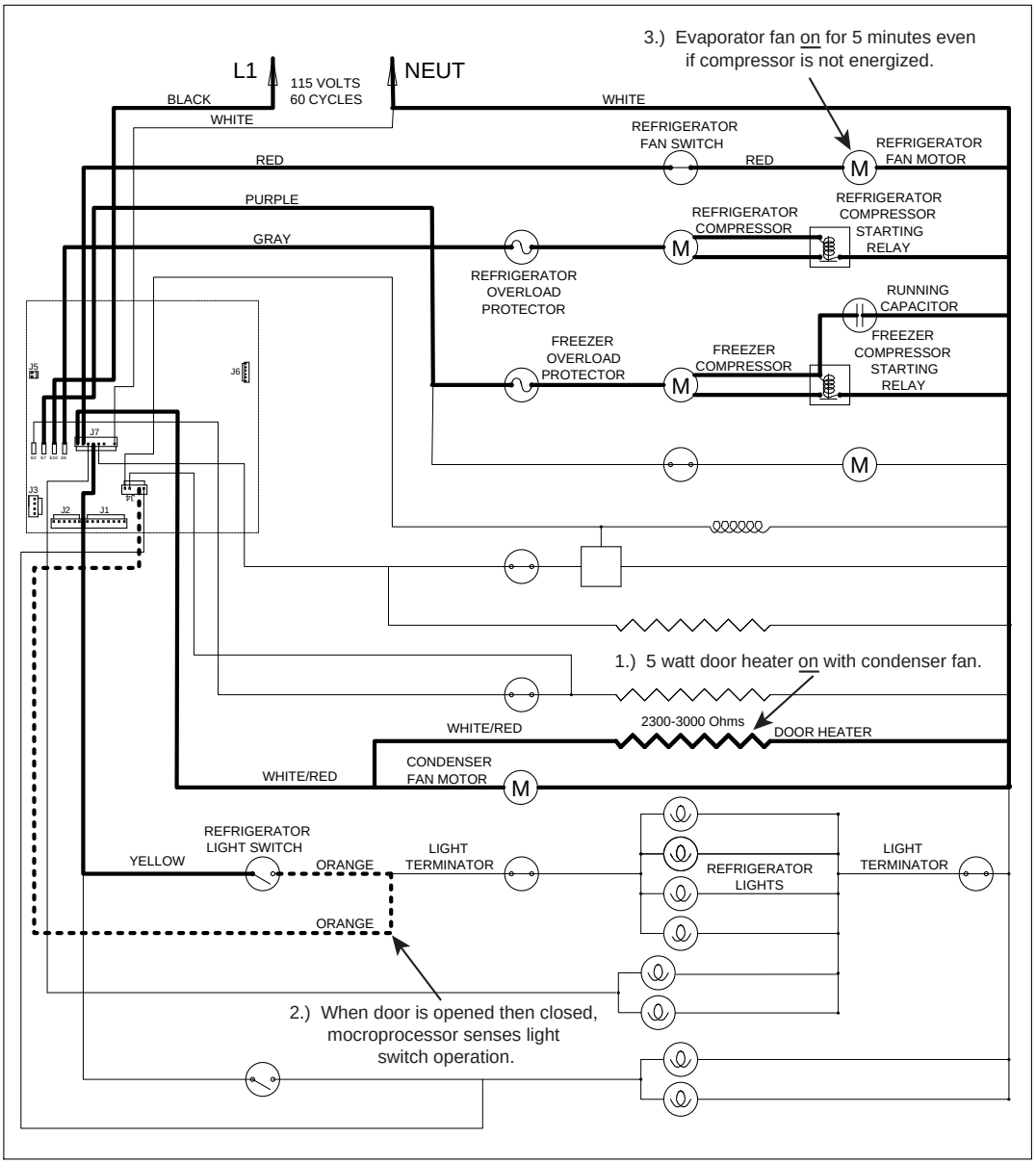

Figure 3-14. Signal Trace Schematic of 611G-3/650G-3 Door Heater & Evaporator Fan Operation

Monitor and Control Refrigerator Off-Cycle Defrost

Temperature signals from the refrigerator compartment evaporator thermistors are monitored by the microprocessor. During off cycle defrost, if the compartment temperature reaches high offset before the evaporator rises to 38°F (3°C), the signal to run the compressor and evaporator fan will wait, allowing the refrigerator evaporator to fully defrost before the compressor is energized (See Figure 3-15).

NOTE: *If a refrigerator compartment thermistor is faulty, the refrigerator compressor defaults to 20 minutes on, 40 minutes off cycling, EE appears at right in LCD, SERVICE flashes and Error Code 05 is logged.*

NOTE: *If a refrigerator evaporator thermistor is faulty, the refrigerator compressor is not energized until compartment air temperature exceeds high offset by 5°F (3°C). SERVICE flashes and Error Code 06 is logged.*

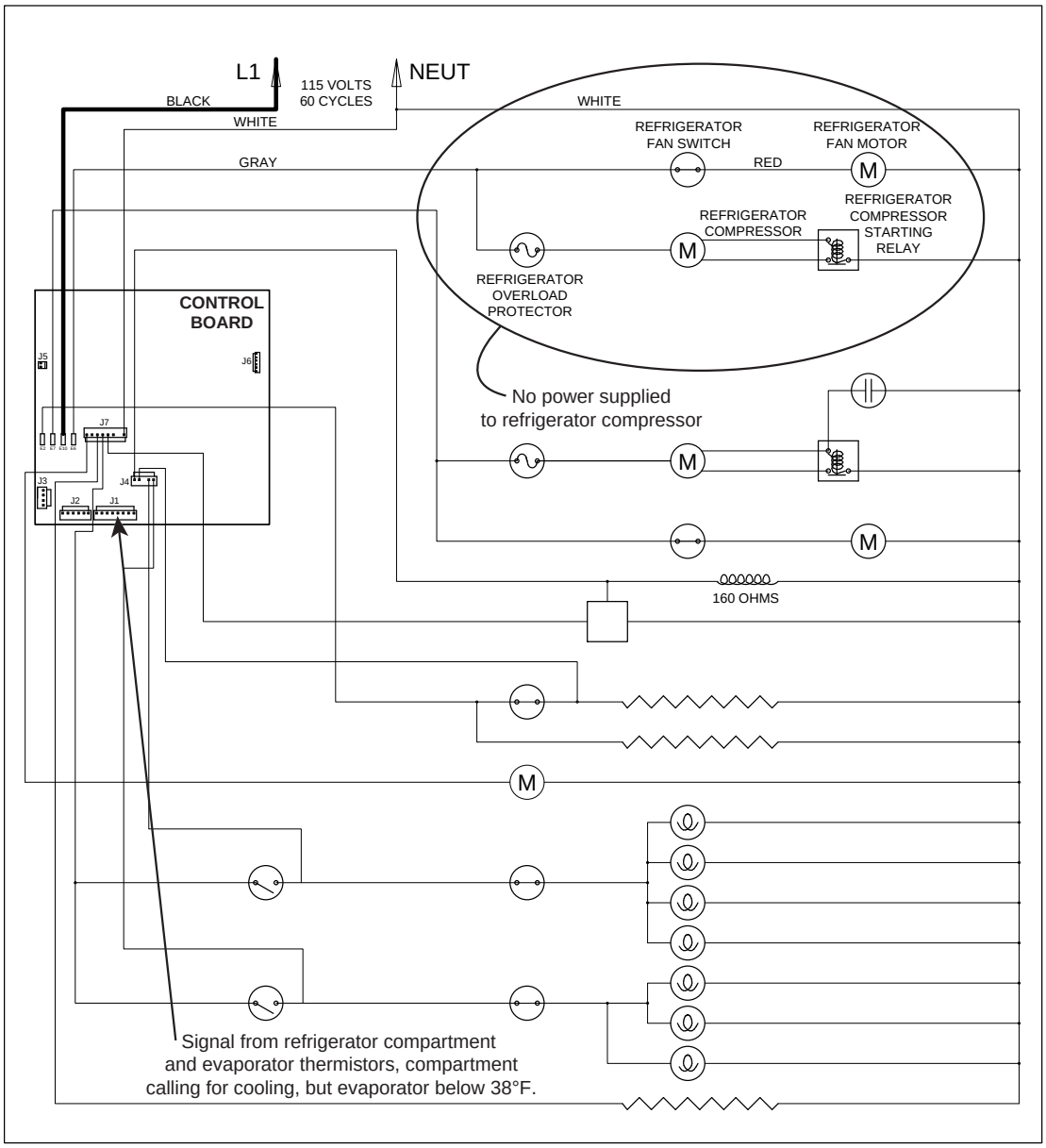

Figure 3-15. Signal Trace Schematic (High Voltage only) of Refrigerator Off-Cycle Defrost

Monitor and Control "Adaptive Defrost" of Freezer Evaporator

Initially, the freezer compressor cycle-runs 12 hours. The control board defrost relay is then closed, supplying power to the defrost, drain tube and fill tube heaters. The compressor, condenser fan and evaporator fan are switched off.

With "Adaptive Defrost", the length of time the defrost heater stays on to open the defrost terminator bimetal (55°F/13°C), is observed by the microprocessor via the grey w/white stripe wire to J4. This length of time is used to calculate the number of hours before the next defrost (defrost interval). If the heater then stays on for a shorter time period, the microprocessor increases the next defrost interval. If the heater then stays on for a longer time period, the microprocessor decreases the next defrost interval. (See Figure 3-16) This is an ongoing process whereby the defrost time and the defrost interval will vary by unit use.

NOTE: *A 5 minute time delay/dwell follows all defrosts, during which the drain tube and fill tube heaters remains energized. At the end of the 5 minute dwell, the compressor, evaporator fan and condenser fan are energized, and the drain tube heater is switched off.*

NOTE: *Minimum defrost interval = 6 hours of compressor run time; Maximum defrost interval = 80 hours of compressor run time; Maximum defrost duration = 20 minutes, plus 5 minute dwell.*

NOTE: *If the defrost sensing line is open, defrost operation defaults to 25 minute defrost time / 6 hour build time, and Error Code 22 is logged. If the evaporator thermistor detects an underheat or overheat situation at the same time, Error Codes 20 or 23 is logged, respectively.*

NOTE: *During defrost, the displayed temperature is locked.*

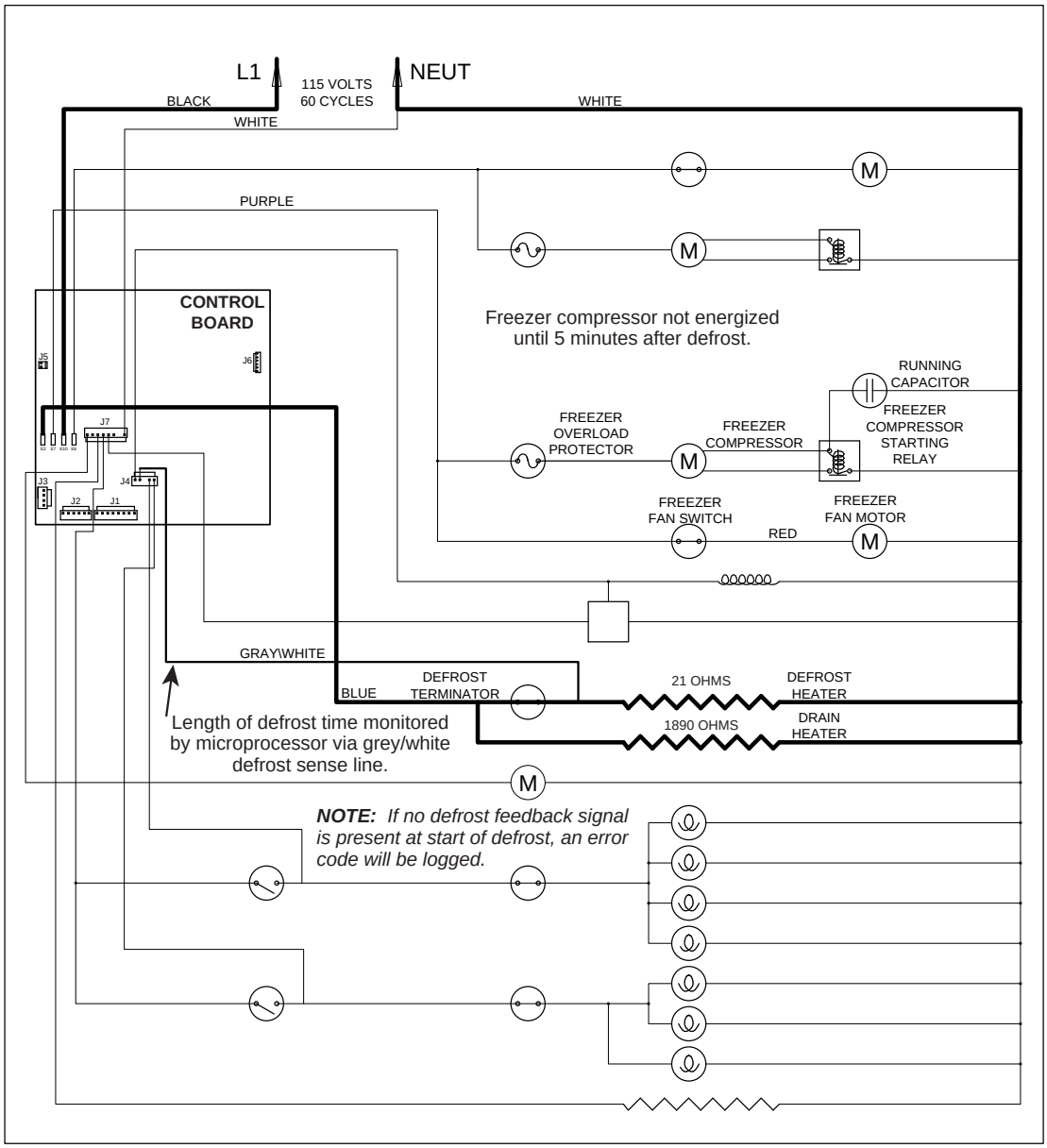

Figure 3-16. Signal Trace Schematic of Freezer Adaptive Defrost

Monitor Compressor Run Duration, Displays If Service is Needed

The microprocessor observes the changing state of the compressor relays to determine the length of compressor run time (See Figure 3-17). If a compressor runs 100% (Fre = 6 hours / Ref = 4 hours), an error code is logged (EC 40 / EC 50, respectively), and defrost is initiated, but SERVICE will not flash.

If several 100% run periods occur, and the compartment temperature does not fall to at least the set point / low off-set temperature average (and the door is not opened during the last run period), then SERVICE will flash along with the error code (See Figure 3-18).

NOTE: *To clear a flashing SERVICE and EC, the problem must be corrected, then switch the unit off then back on and/or press the Bell ON/OFF key for 15 seconds. Failure to clear an error code will cause SERVICE to display constant once Diagnostic Mode is initiated.*

NOTE: *If the unit is ever switched OFF then back ON, the compressor will not energize for at least 3 minutes. This 3 minute minimum OFF time is used to protect the compressor and its electricals.*

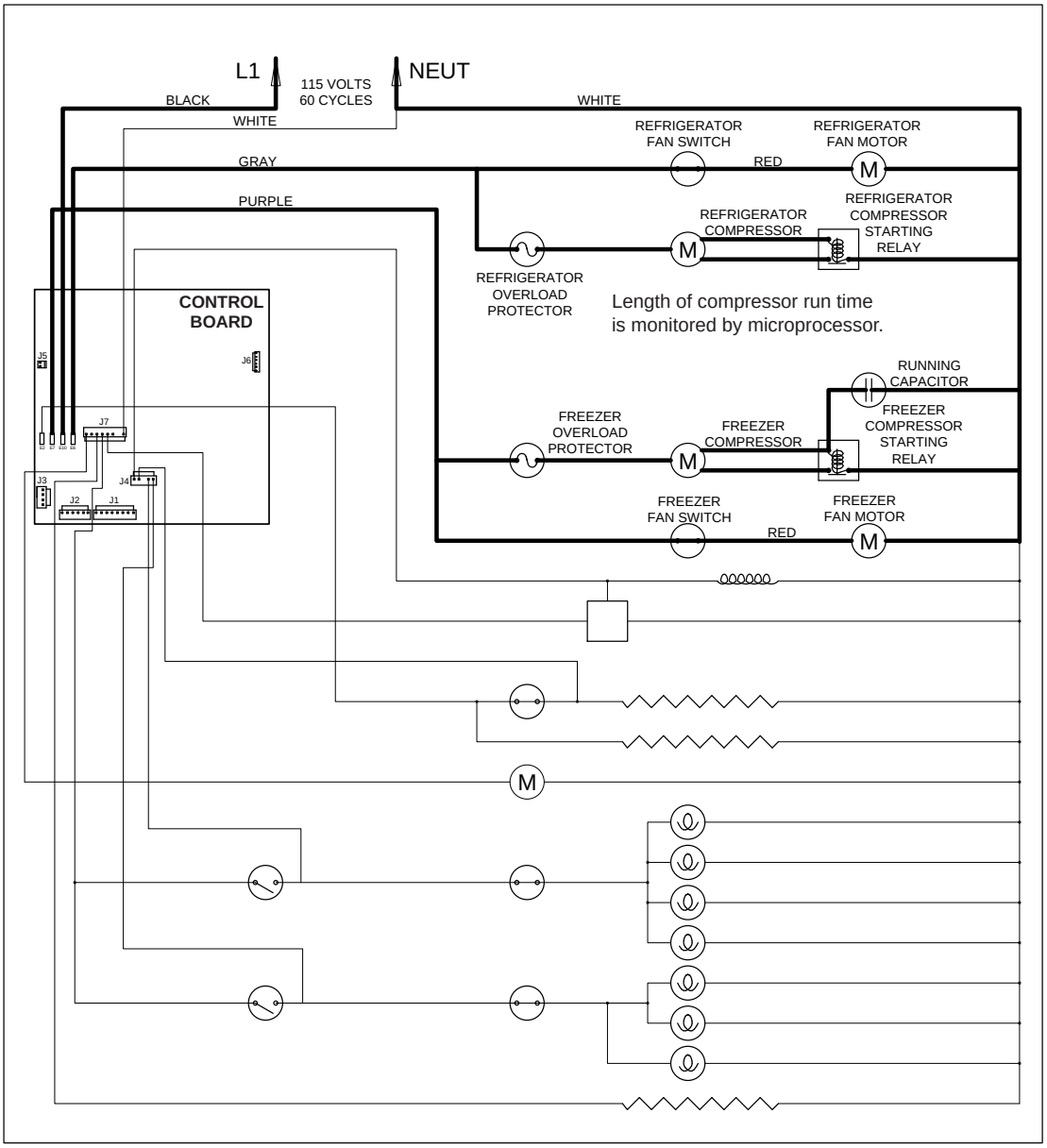

Figure 3-17. Signal Trace Schematic of Compressor Electrical System

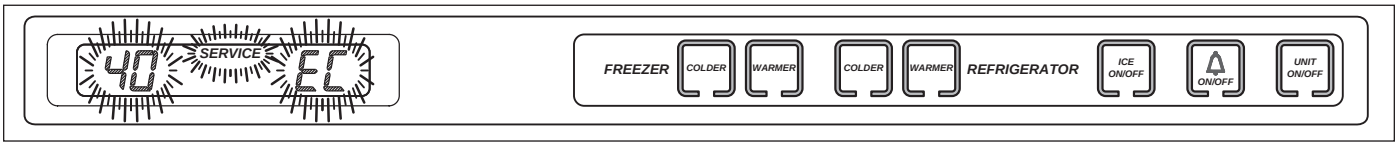

Figure 3-18. SERVICE & EC Flashing = Several Excessive Compressor Run Periods

Monitor Icemaker System and Display If Service is Needed

The microprocessor observes the 115 Volts AC supplied to the icemaker water valve solenoid. If the solenoid is energized for more than 15 seconds, power to the icemaker system is disabled for 24 hours (See Figure 3-19), and an error code is logged (EC 30). If this happens five consecutive times, ICE and SERVICE on the LCD will flash and the ICE ON/OFF key will be disabled (See Figure 3-20).

NOTE: *To clear the ICE and SERVICE error indicators, and reactivate the ICE ON/OFF key, the problem must be corrected, then the unit must be switched OFF and back ON, and the Alarm key must be pressed for 15 seconds to clear the Error Code.*

NOTE: *To allow ice to freeze fully and reduce effects of low water pressure, power to the icemaker system is interrupted for 45 minutes after each ice harvest. This can be bypassed for service purposes by switching the icemaker system OFF, then back ON using the ICE ON/OFF key.*

NOTE: *When in Sabbath Mode, the icemaker system is disabled. Sabbath Mode will be covered*

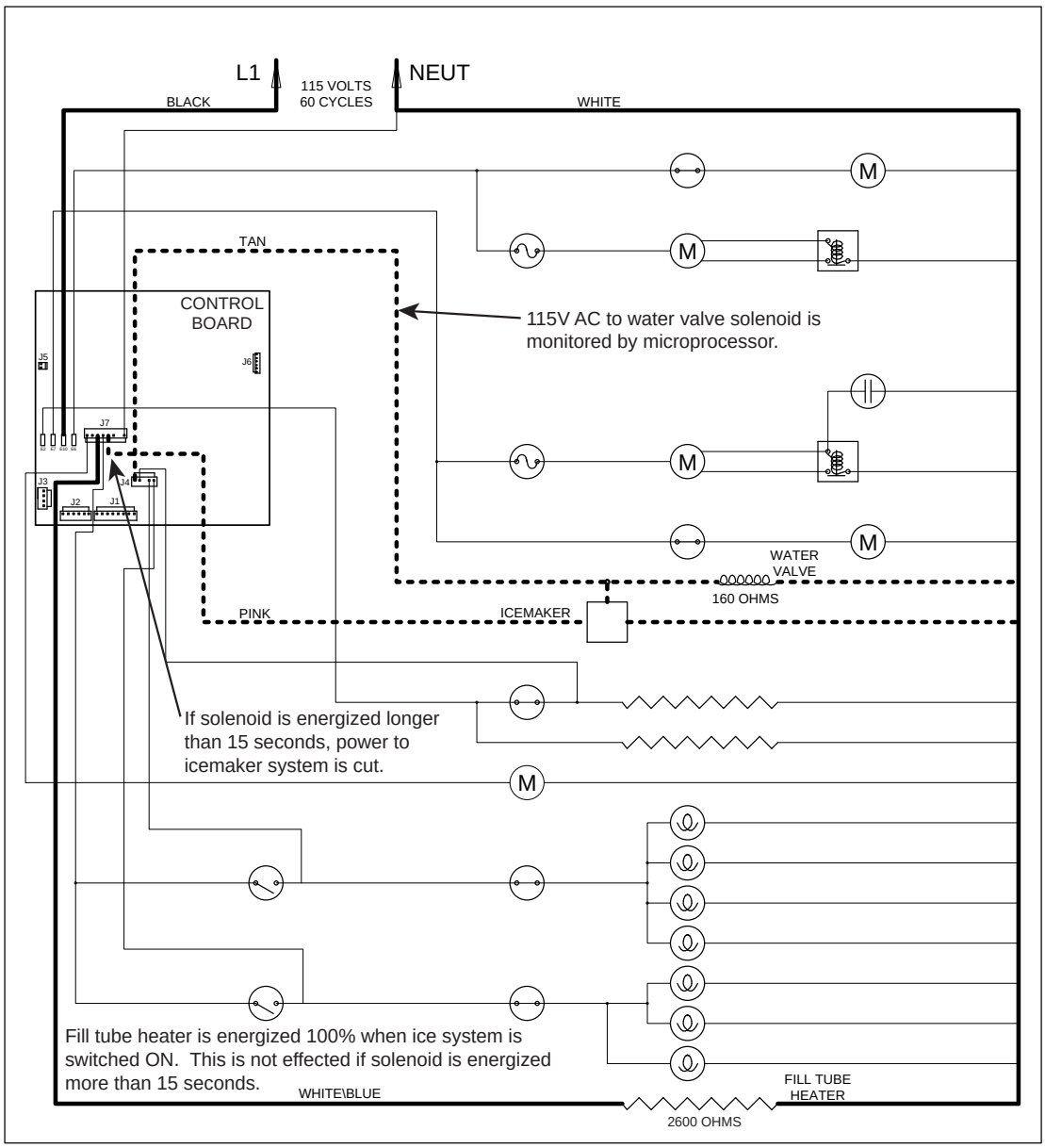

Figure 3-19. Signal Trace Schematic of Icemaker Electrical System

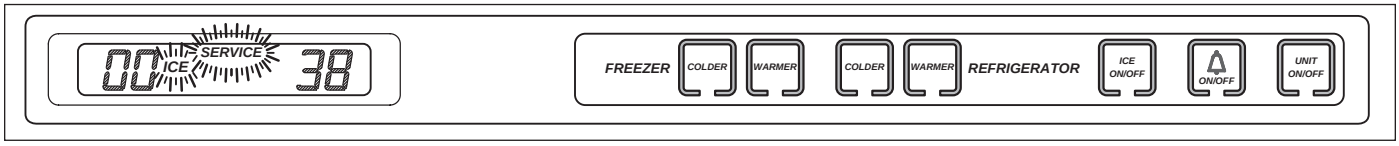

Figure 3-20. ICE & SERVICE Flashing = Solenoid Energized 15 sec., every 24 hrs., 5 consecutive times

UNIQUE ELECTRONIC CONTROL INPUT OPERATIONS

The following pages illustrate unique input operations performed at the control panel that you would not expect a customer to perform every day. The input operations described are: Temperature Unit Selection Mode, Sabbath Mode, Showroom Mode, Manual Compartment Disable Mode and Manual Freezer Evaporator Defrost.

Temperature Units Selection Mode *(Selecting Degrees Fahrenheit or Degrees Celsius Display)*

The electronic control is initially set to display temperature in Fahrenheit (°F) units of measure. Units of measure can be converted from °F to °C (Celsius), and/or back again. This operation is called Temperature Units Selection.

NOTE: *Temperature Units Selection must be performed within the first minute after switching the unit ON.*

To convert temperature units of measure from Fahrenheit (°F) to Celsius (°C) readings, press and hold the door ajar alarm bell ON/OFF key and the UNIT ON/OFF key simultaneously for 5 seconds, then release the keys (See Figure 3-21). " °C " will appear on the LCD indicating that temperatures will now be displayed in Celsius units of measure. To convert back to Fahrenheit units of measure, repeat the steps above (See Figure 3-22).

NOTE: *Temperature Units Selection Mode will end 10 seconds after the last key stroke.*

NOTE: *Do not press and hold the UNIT ON/OFF key first, that will simply switch the unit OFF.*

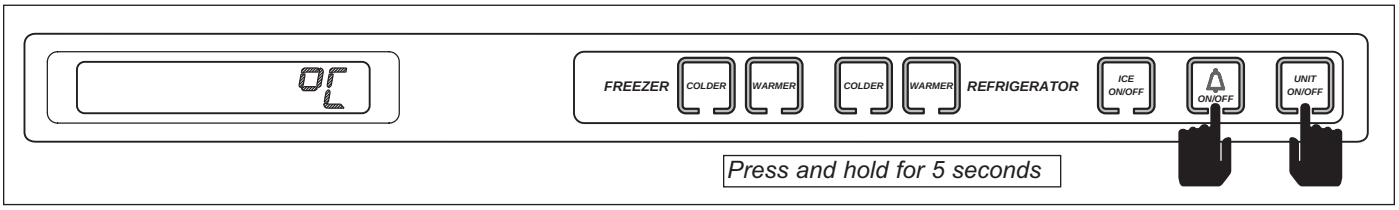

Figure 3-21. Converting Temperature Units of Measure to °C *(within first minute after switching unit ON)* - Press and Hold Bell ON/OFF Key and UNIT ON/OFF Key for 5 Seconds

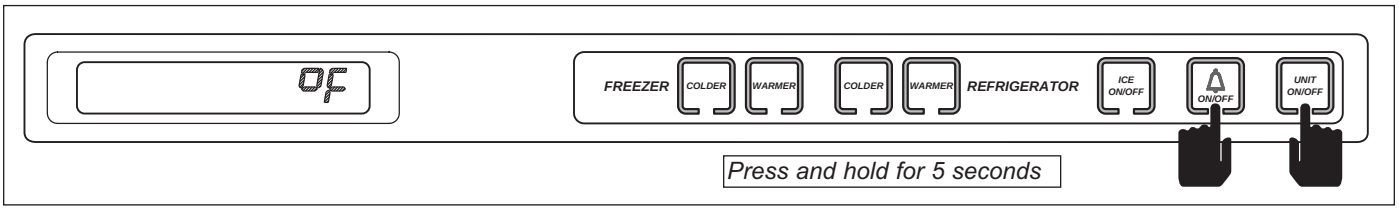

Figure 3-22. Converting Temperature Units of Measure to °F *(within first minute after switching unit ON)* - Press and Hold Bell ON/OFF Key and UNIT ON/OFF Key for 5 Seconds

Sabbath Mode

Sabbath Mode was incorporated into the electronic control system for the observance of certain religious days. Initiating Sabbath Mode disables the LCD, lighting system, ice making system and door ajar alarm feature.

To initiate Sabbath Mode, the unit must first be switched OFF using the UNIT ON/OFF key (See Figure 3-23), then press and hold the UNIT ON/OFF key until the LCD and lights switch OFF, approximately 10 seconds (See Figure 3-24). To return to normal operation, press and release the UNIT ON/OFF key.

NOTE: *During Sabbath Mode, the LCD is disabled and set-points cannot be changed.*

NOTE: *During Sabbath Mode, the compartment thermistors still control compressor operation, except that when high offset is reached, there is a random 15 to 25 second delay before compressors are energized.*

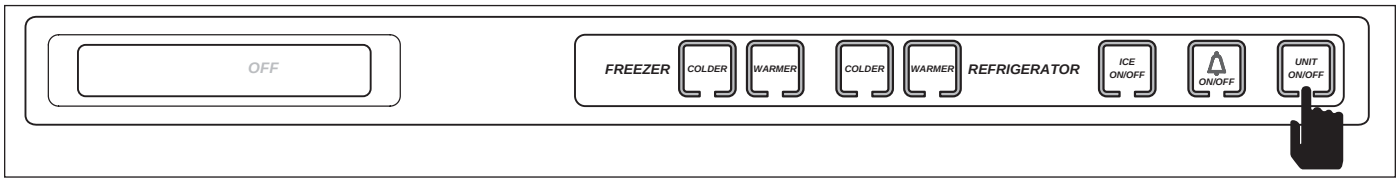

Figure 3-23. To Enter Sabbath Mode, Switch Unit OFF First

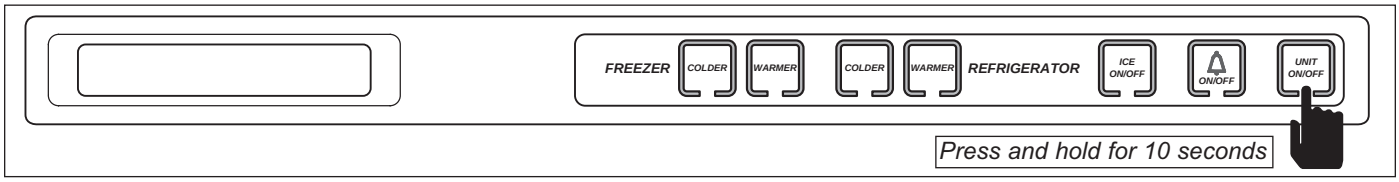

Figure 3-24. Then Press and Hold UNIT ON/OFF Key for 10 Seconds

Showroom Mode

Showroom Mode was incorporated into the electronic control system so that units could be displayed in a showroom setting. When in Showroom Mode, all cooling functions are disabled, but the lighting system remains active.

To initiate Showroom Mode, the unit must first be switched OFF using the UNIT ON/OFF key (See Figure 3-25), then press and hold either pair of WARMER and COLDER keys, then the UNIT ON/OFF key, then release all three keys (See Figure 3-26). To return the unit to normal operation, repeat the steps above.

NOTE: *Always check set-points after returning unit to normal operation.*

NOTE: *It is possible to determine if a unit is in Showroom Mode by initiating Diagnostic Mode. If "Sr" is observed in the left temperature display area during Diagnostic Mode, the unit is in Showroom mode. Initiating Diagnostic Mode is covered later in this section.*

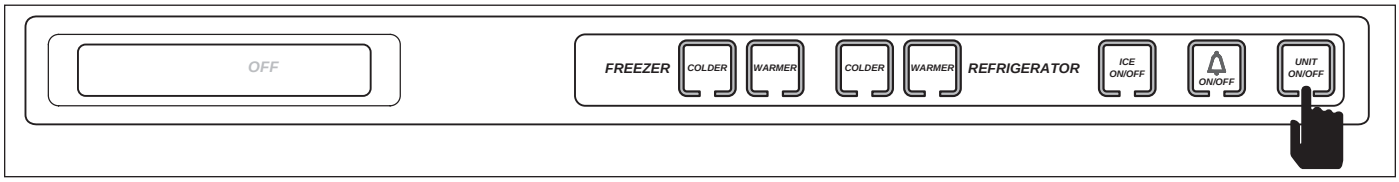

Figure 3-25. To Enter (or Exit) Showroom Mode, Switch Unit OFF First

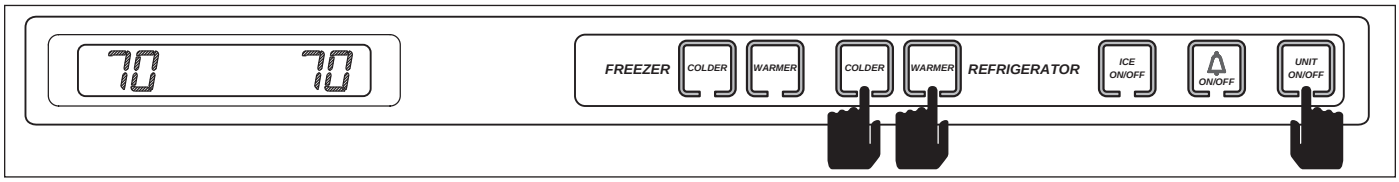

Figure 3-26. Then Press and Hold WARMER and COLDER Keys, Then the UNIT ON/OFF Key

Manual Compartment Disable Mode

Manual Compartment Disable Mode allows a customer or Service Technician to switch one compartment off for interior cleaning, defrosting, or diagnostic purposes, while allowing the other compartment to continue cooling.

To initiate Manual Compartment Disable Mode, the unit must first be switched OFF using the UNIT ON/OFF key (See Figure 3-27), then press and hold the WARMER key for the compartment being disabled, then the UNIT ON/OFF key, then release both keys (See Figure 3-28). The LCD will display "- -" (double dashes) in place of temperature readings for the compartment chosen, indicating all cooling functions for that compartment are disabled. To return the unit to normal operation, repeat the steps above, or press UNIT ON/OFF key.

NOTE: *Always check set-points after returning unit to normal operation.*

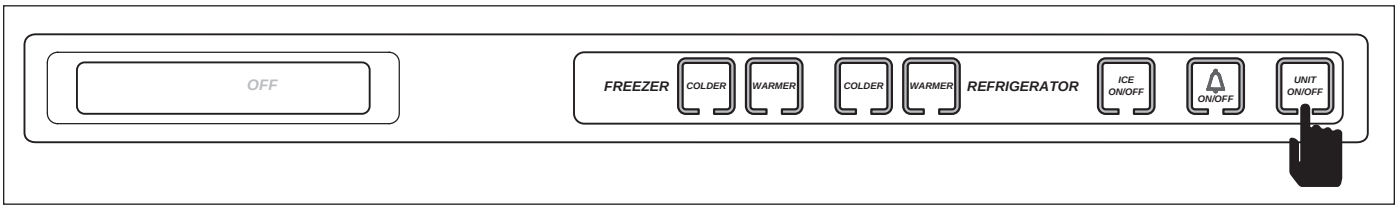

Figure 3-27. To Enter (or Exit) Manual Compartment Disable Mode, Switch Unit OFF First

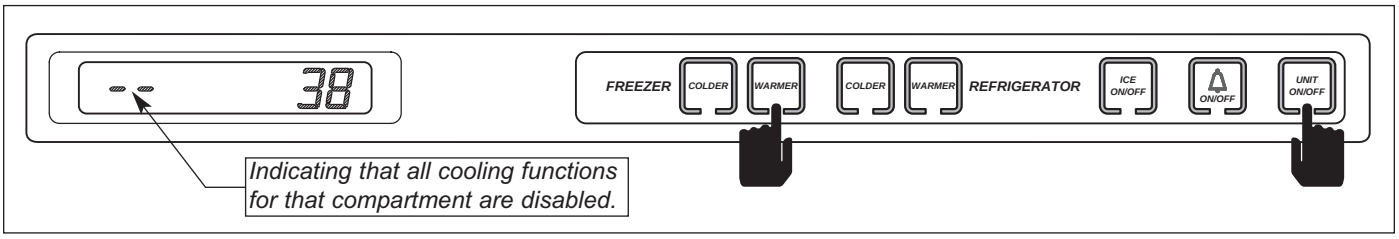

Figure 3-28. Then Press and Hold WARMER Key for Compartment Being Disabled, Then the UNIT ON/OFF Key.

Manual Freezer Evaporator Defrost

Manual Freezer Evaporator Defrost was incorporated into the electronic control to assist in servicing and diagnostics.

To initiate manual freezer evaporator defrost, press and hold the ICE ON/OFF key for 5 seconds, then release the key. (See Figure 3-29).

NOTE: *Manual Freezer Evaporator Defrost will not operate if unit is in Sabbath Mode.*

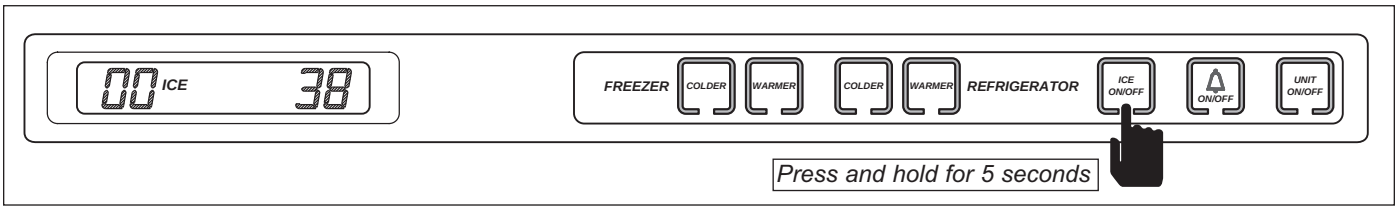

Figure 3-29. Initiate Manual Freezer Evaporator Defrost - Press and Hold ICE ON/OFF key for 5 Seconds

POSSIBLE ERROR INDICATORS

These pages contain diagrams illustrating what a customer may see on the LCD if there is a problem with the unit.

NOTE: *To clear indicators and error codes, problem must be corrected then press Bell ON/OFF key for 15 seconds.*

NOTE: *For thermistor errors described below, thermistor can be tested by submersing it in a glass of ice water for 2 to 5 minutes, then check for 30,000 to 33,000 ohms.*

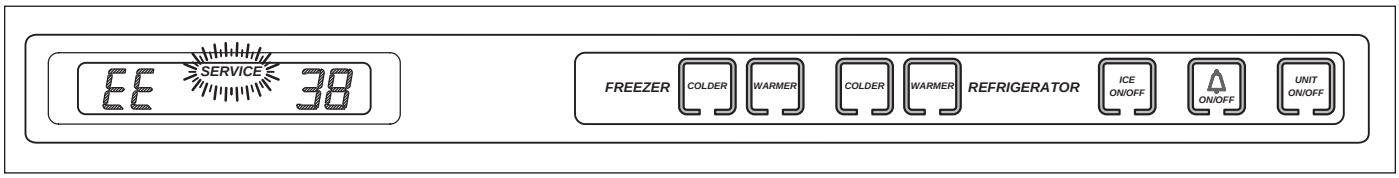

Figure 3-30. "EE" at Left and "SERVICE" Flashing = Freezer Compartment Thermistor (or its Wiring) Fault

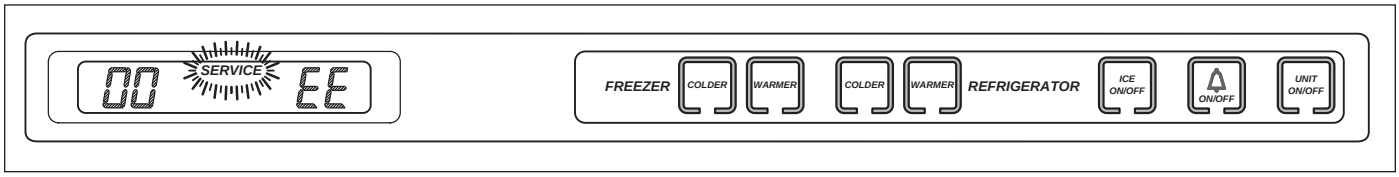

Figure 3-31. "SERVICE" Flashing and "EE" at right = Refrig. Compartment Thermistor (or its wiring) Fault

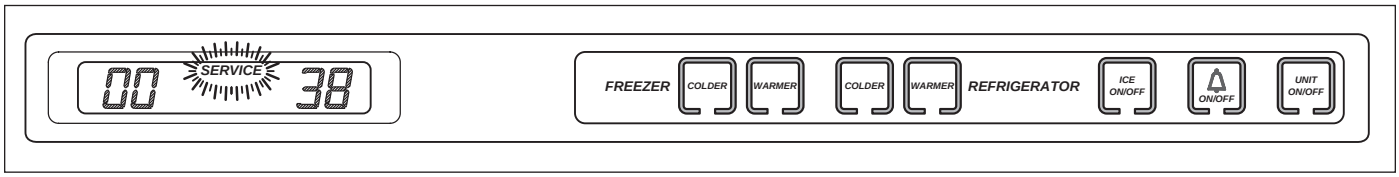

Figure 3-32. "SERVICE" Alone Flashing = Refrig. Evap. Thermistor (or its Wiring) Fault

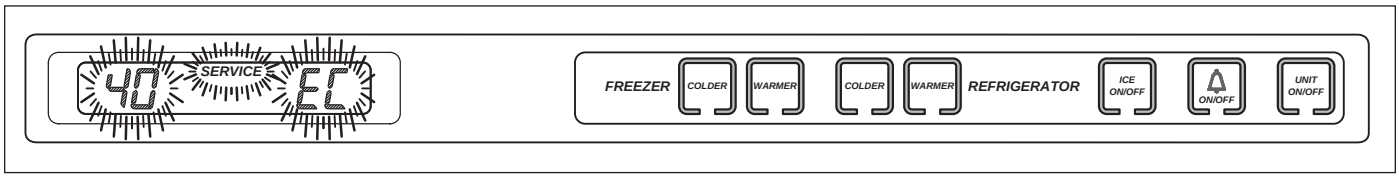

Figure 3-33. "40", or "50" and "SERVICE" and "EC" Flashing = Excessive Compressor Run

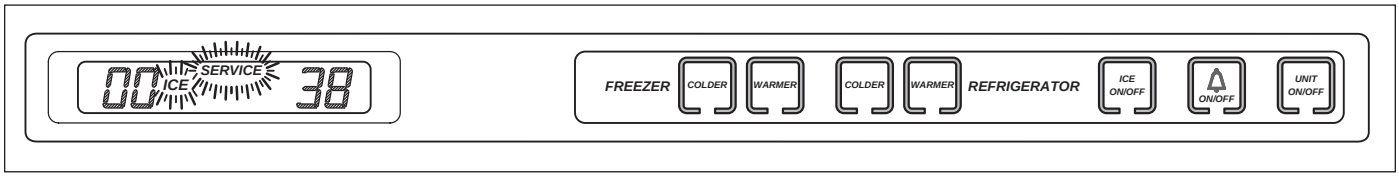

Figure 3-34. "ICE" & "SERVICE" Flashing = Valve Solenoid energized 15 Sec., Icemaker System Disabled

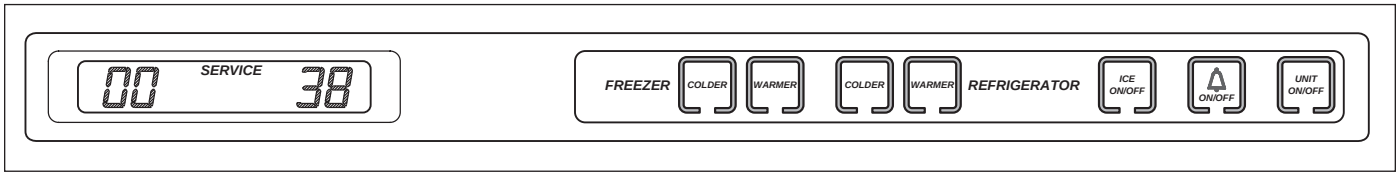

Figure 3-35. "SERVICE" Steady, not Flashing = Error Codes Observed in Diagnostic Mode, but not Cleared

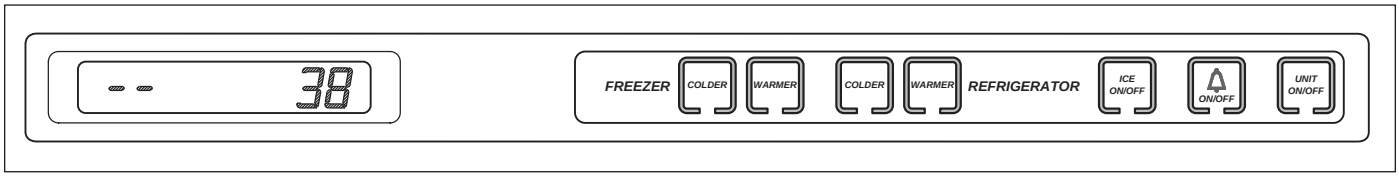

Figure 3-36. " - - " Double Dashes Displayed = Compartment Disabled

TROUBLESHOOTING INPUT OPERATIONS

The following few pages explain troubleshooting input operations performed at the control panel. The input operations described are Diagnostic Mode, Manual Component Activation Mode and Temperature Log Recall.

Diagnostic Mode

Initiating Diagnostic Mode allows the Service Technician to observe real-time temperature readings from all thermistors without temperature averaging. If errors were registered by the thermistors or the defrost system, "Error Codes" will also be displayed during diagnostic mode.

To initiate Diagnostic Mode, the unit must be ON, then press and hold either COLDER key, and press the UNIT ON/OFF key, then release both keys (See Figure 3-37). If no error codes are registered, the left display area will show real-time temperature of the thermistor, the right display area will show the thermistor location code, and all LCD indicators will illuminate. Pressing either COLDER key or either WARMER key while in Diagnostic Mode will toggle to the next or previous thermistor location, respectively. (See Figure 3-38, 3-39 and 3-40)

NOTE: *If the COLDER and UNIT ON/OFF keys are pressed and held for 10 seconds, Manual Component Activation Mode will be initiated (this is covered later in the section).*

NOTE: *Diagnostic Mode will end 20 seconds after the last key stroke.*

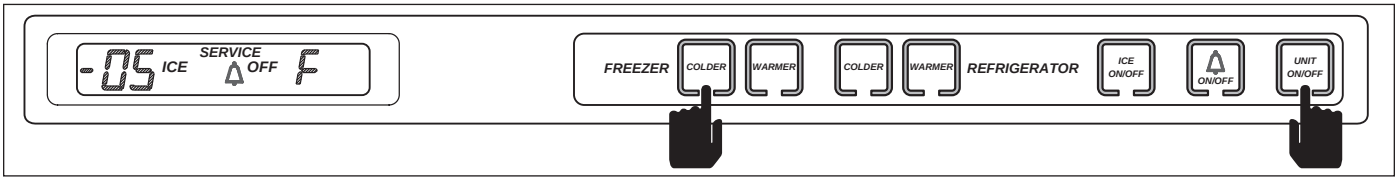

Figure 3-37. Initiate Diagnostic Mode - Press and Hold Either COLDER Key, Then the UNIT ON/OFF Key ("F" Indicates Freezer Compartment)

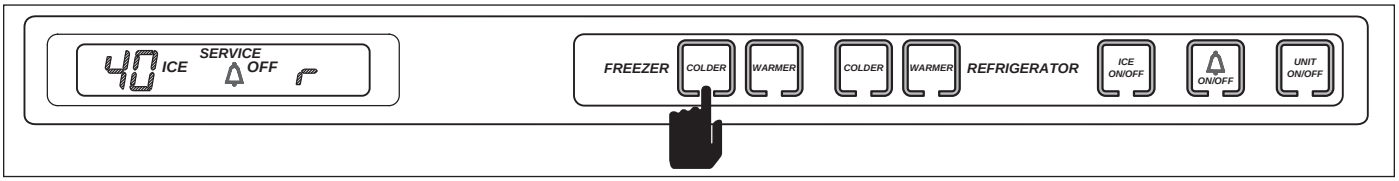

Figure 3-38. Toggle Through Temperature Readings - Press Either COLDER Key or Either WARMER Key ("r" Indicates Refrigerator Compartment)

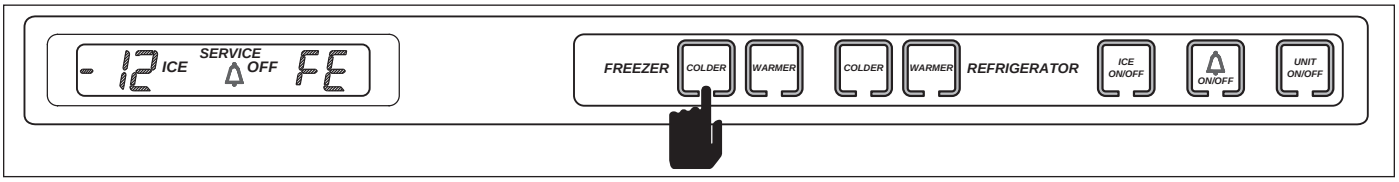

Figure 3-39. Toggle Through Temperature Readings - Press Either COLDER Key or Either WARMER Key ("FE" Indicates Freezer Evaporator)

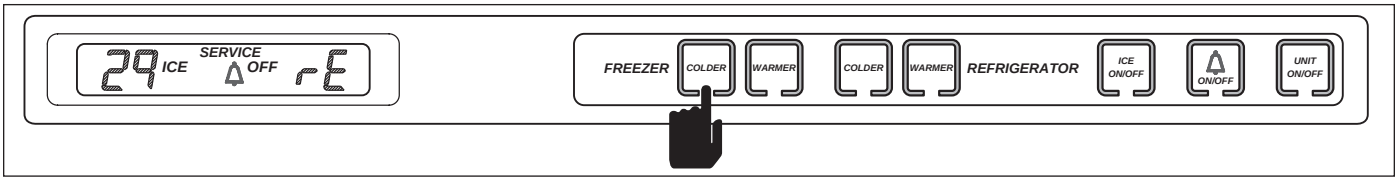

Figure 3-40. Toggle Through Temperature Readings - Press Either COLDER Key or Either WARMER Key ("rE" Indicates Refrigerator Evaporator)

Diagnostic Mode Indicators

If “EE” is observed in the left display area during Diagnostic Mode, the thermistor in that location is open or shorted, or there is a break in that thermistor’s wiring (See Figure 3-41).

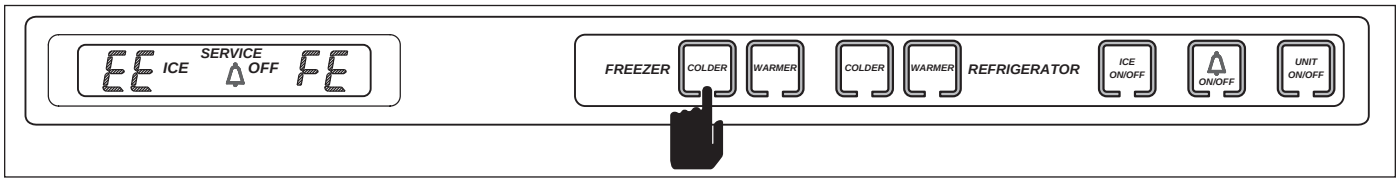

Figure 3-41. “EE” Observed in Diagnostic Mode = Thermistor (or its wiring) Fault in Location Indicated

If “Sr” is observed in the left display area when Diagnostic Mode is initiated, the unit is in Showroom Mode, which was explained earlier in this section (See Figure 3-42).

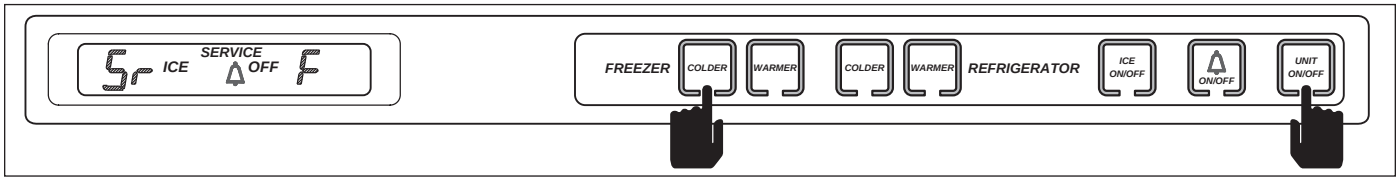

Figure 3-42. “Sr” Observed While in Diagnostic Mode = Unit is in Showroom Mode

If “EC” is observed in the right display area during Diagnostic Mode, numbers at left are “Error Codes” (See Figure 3-43). Error Codes indicate problems logged by specific components. If error codes are logged, they will appear before temperature readings and can be toggled through with the temperature readings as described on the previous page. (See Error Code Table below and instruction on how to clear Error Codes on the next page.)

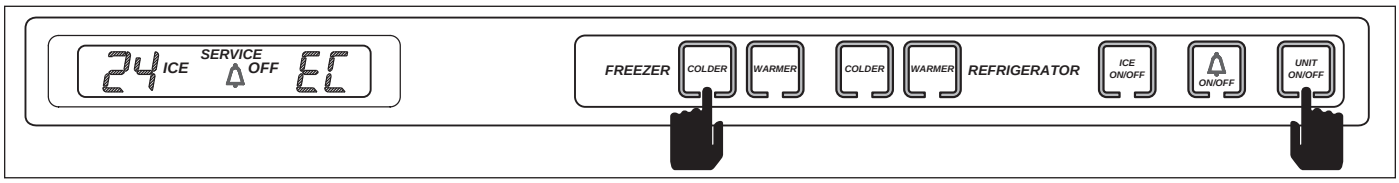

Figure 3-43. Numbers at Left with “EC” at Right = Error Code
(See Table Below and How to Clear Error Codes on next page)

Error Code Table	
CODE	**INDICATION**
05	***Refrig. Cabinet Thermistor read open or shorted for 10+ seconds, or repeatedly read erratic temp’s***
06	***Refrig. Evaporator Thermistor read open or shorted for 10+ seconds, or repeatedly read erratic temp’s***
07	***Freezer Cabinet Thermistor read open or shorted for 10+ seconds, or repeatedly read erratic temp’s***
08	***Freezer Evaporator Thermistor read open or shorted for 10+ seconds, or repeatedly read erratic temp’s***
20	***Defrost Under-heat with No Voltage Feedback Through Gray/White Wire at Defrost Start***
21	***Defrost Overheat***
22	***No Voltage Feedback Through Gray/White Wire at Defrost Start***
23	***Defrost Overheat with No Voltage Feedback through Gray/White Wire at Defrost Start***
24	***Defrost Under-heat***
30	***Excessive Icemaker Water Valve Solenoid Activation (Exceeded 15 Seconds)***
40	***Excessive Freezer Compressor Run***
50	***Excessive Refrigerator Compressor Run***

Clearing Error Codes

If error codes are observed in diagnostic mode, a non-flashing SERVICE indicator will appear on the LCD when Diagnostic Mode ends, indicating error codes are still logged (See Figure 3-44). To clear a non-flashing SERVICE indicator and the error codes, the problem must be corrected and the unit must be ON. Then, the Bell ON/OFF key must be pressed and held for fifteen seconds. The control will emit a short "beep" when the SERVICE indicator and error codes are cleared. (See Figure 3-45)

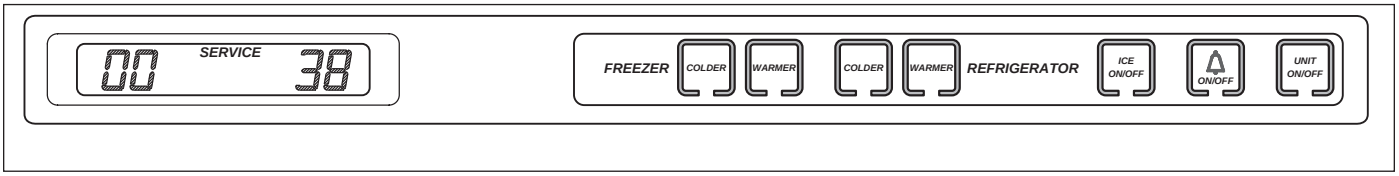

Figure 3-44. Non-flashing SERVICE Indicator after Diagnostic Mode = Error Codes were Registered

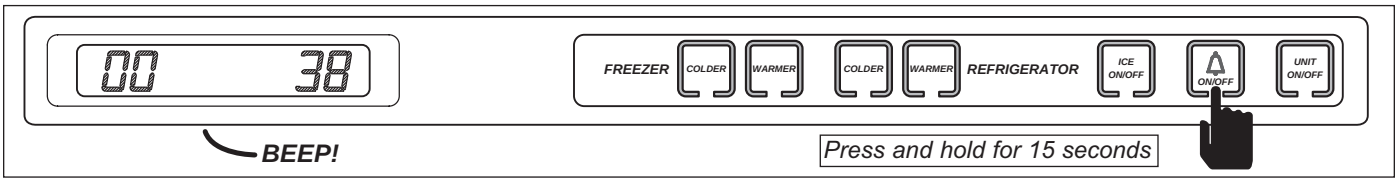

Figure 3-45. Clear Non-flashing SERVICE Indicator - Press & Hold Bell ON/OFF Key for 15 Seconds

Manual Component Activation Mode

Manual Component Activation Mode energizes a cooling system for 5 minutes. When activated, the chosen compartment's compressor and evaporator fan are energized along with the condenser fan. While in Component Activation Mode, the evaporator temperatures for that compartment are displayed on the LCD. This mode also allows the Service Technician to check for proper voltage readings at the activated components without having to wait for the compartment to call for cooling.

To initiate Manual Component Activation Mode, the unit must be ON, then press and hold the desired compartment COLDER key and UNIT ON/OFF key for 10 seconds (See Figure 3-46). The evaporator temperature for that compartment will be displayed in left display area of the LCD and the right display area will show the thermistor location.

NOTE: *If the COLDER and UNIT ON/OFF keys are pressed and held for less then 10 seconds, Diagnostic Mode will be initiated. This was covered earlier in the section.*

NOTE: *It is possible to toggle through the other temperature readings as in Diagnostic Mode, but in this case the temperature readings will last for 5 minutes rather than 20 seconds.*

NOTE: *The compressor overload could prevent the compressor from energizing.*

NOTE: *Manual Component Activation Mode will end 5 minutes after initiated. It is possible to end this 5 minute run time and return to normal operation by switching the unit OFF then back ON. If this is done, note that the electronic control will observe a three minute minimum compressor OFF time when the unit is switched back ON. This is to protect the compressor and its electricals.*

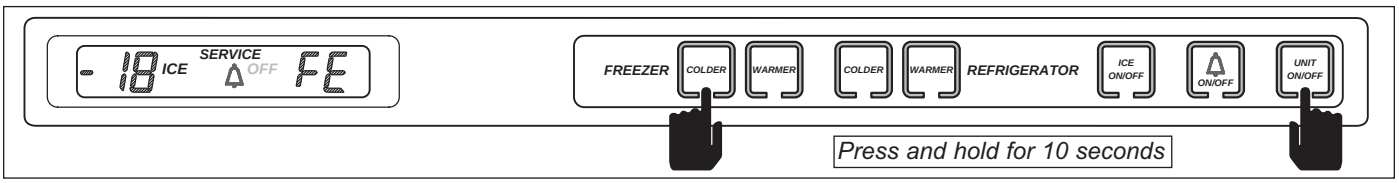

Figure 3-46. Initiate Manual Component Activation Mode -
Press and Hold Desired COLDER Key and UNIT ON/OFF Key for 10 Seconds

Temperature Log Recall Mode

The electronic control system is equipped with a temperature history data storage system. This system logs/stores the average temperature of each individual thermistor every two hours, along with any event indicators (explained later in this section), that may have occurred. These two-hour periods are referred to as *"indexes"*. Up to 168 indexes can be stored for each compartment, making it possible to observe the preceding fourteen days of the unit's temperature history *(each index equals 2 hour temperature average; 2 hours X 168 indexes = 14 days)*. After 168 indexes are stored, each new index will bump the oldest index. Index number "1" being the most recent two-hour temperature average and index number "168" being the oldest. Accessing this temperature history data so it can be viewed on the LCD is accomplished by initiating Temperature Log Recall Mode.

There are two ways to initiate Temperature Log Recall Mode. One allows viewing of compartment temperature history only (see below), the other allows viewing of compartment temperature history and evaporator temperature history (see following page).

Initiate Temperature Log Recall Mode To View Compartment Temperature History Only - Begin with the unit ON. Now, press and hold the desired compartment WARMER key, then press the UNIT ON/OFF key, then release both keys (See Figure 3-47). The left display area on the LCD will show average compartment thermistor temperature and in the right display area will be the index number. The first index number will be "1", indicating the most recent two-hour temperature average. The right display area will also flash the thermistor location code at 3 second intervals (See Figure 3-48).

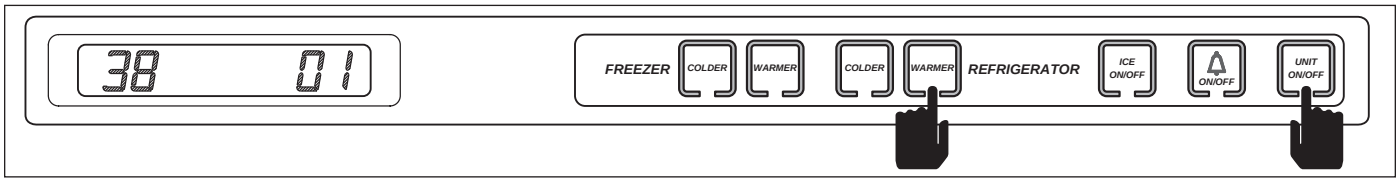

Figure 3-47. Initiate Temperature Log Recall Mode To View Compartment Temperature History Only - Press and Hold Desired WARMER Key, Then Press UNIT ON/OFF Key

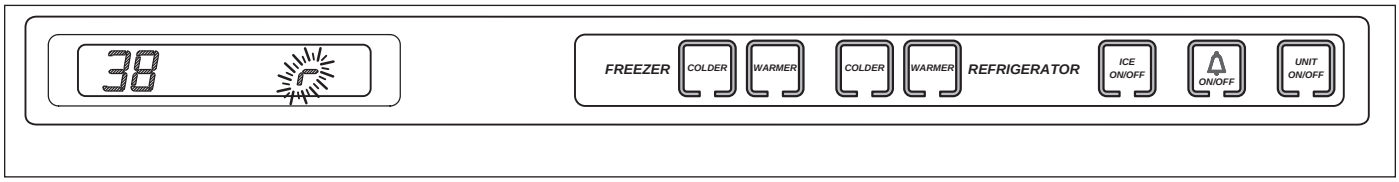

Figure 3-48. Thermistor Location Code Flashes Every Three Seconds

To toggle up through the indexes (from 1 to 168), press the same WARMER key in multiple key strokes (See Figure 3-49). To toggle down through the indexes (from 168 to 1), press the corresponding COLDER key in multiple key strokes (See Figure 3-50).

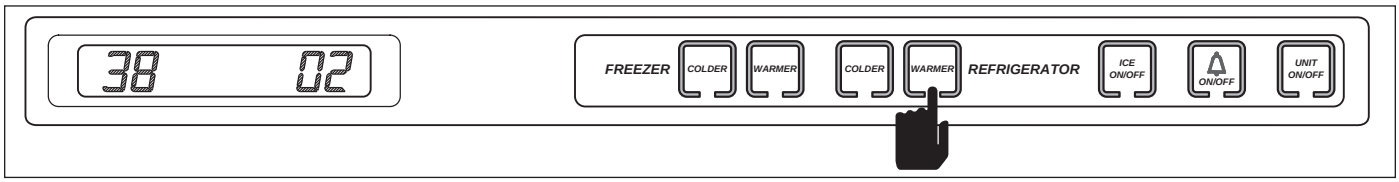

Figure 3-49. Toggle Up Through Indexes - Press WARMER Key in Consecutive Key Strokes

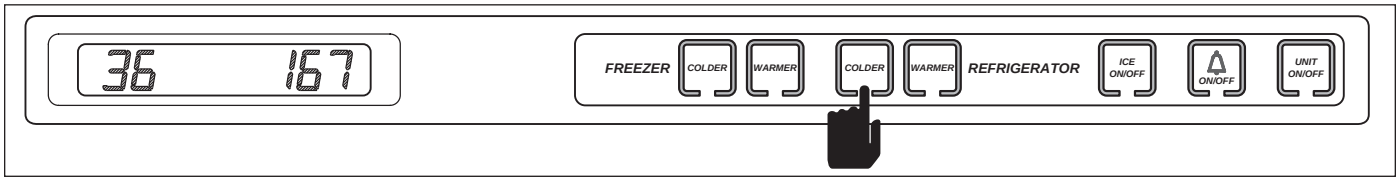

Figure 3-50. Toggle Down Through Indexes - Press COLDER Key in Consecutive Key Strokes

Initiate Temperature Log Recall Mode To View Compartment and Evaporator Temperature History - Begin with the unit ON and in Diagnostic Mode (See Figure 3-51). While in Diagnostic Mode, toggle through the readings until the desired thermistor temperature is displayed on the LCD (See Figure 3-52). Now, press the WARMER key for that compartment and the UNIT ON/OFF key simultaneously (See Figure 3-53). The left display area on the LCD will show average thermistor temperature and in the right display area will be the index number "1" indicating the most recent 2-hour temperature average (See Figure 3-53). The right display area will also flash the thermistor location code at three second intervals (See Figure 3-54).

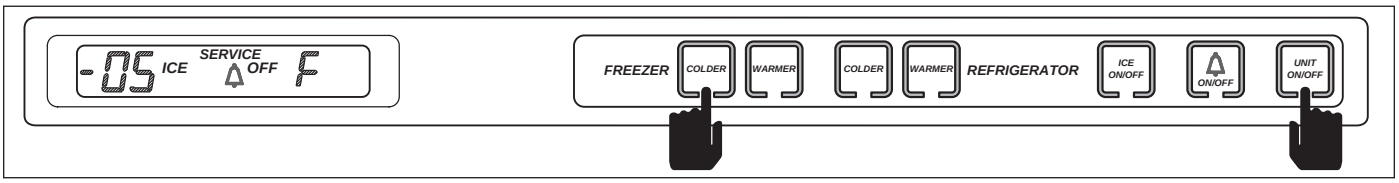

Figure 3-51. Initiate Diagnostic Mode - Press and Hold Either COLDER Key, then the UNIT ON/OFF Key

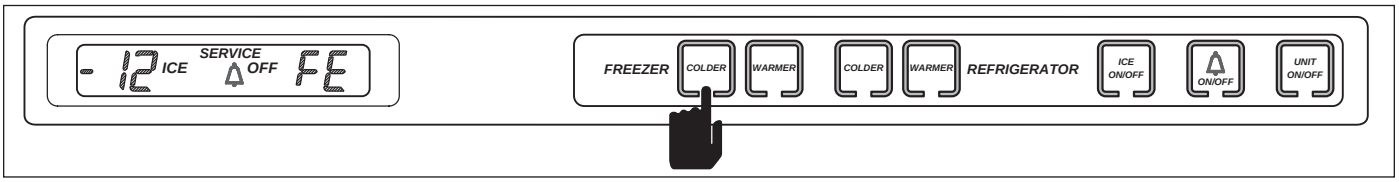

Figure 3-52. Toggle Through Temperature Readings - Press Either COLDER Key or Either WARMER Key Until Desired Thermistor Temperature is Displayed

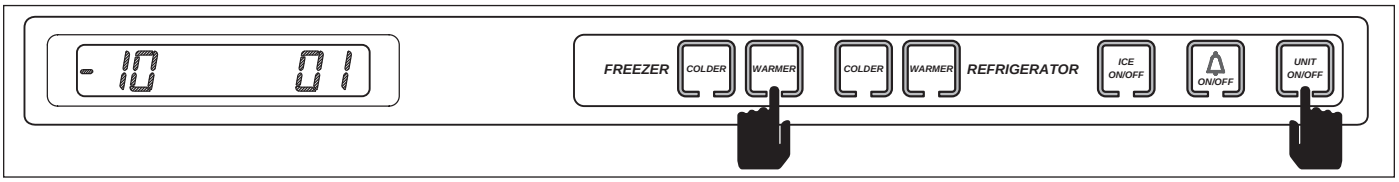

Figure 3-53. Initiate Temperature Log Recall Mode To View Temperature History - Press and Hold Desired WARMER Key and UNIT ON/OFF Key

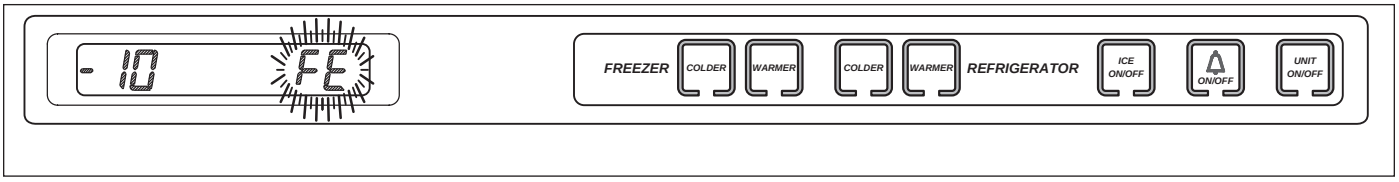

Figure 3-54. Thermistor Location Code Flashes Every Three Seconds

To toggle up through the indexes (from 1 to 168), press the same WARMER key in multiple key strokes (See Figure 3-55). To toggle down through the indexes (from 168 to 1), press the corresponding COLDER key in multiple key strokes (See Figure 3-56).

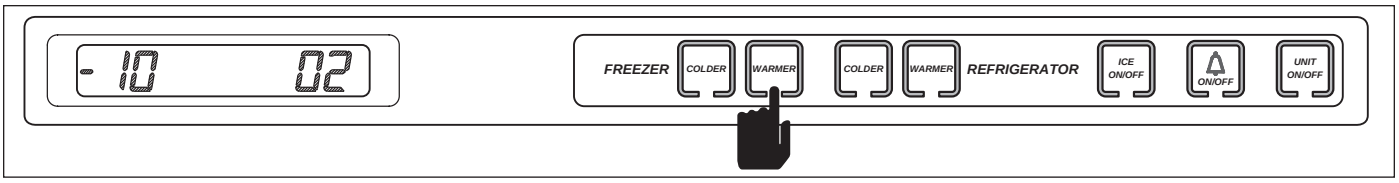

Figure 3-55. Toggle Up Through Indexes - Press WARMER Key in Consecutive Key Strokes

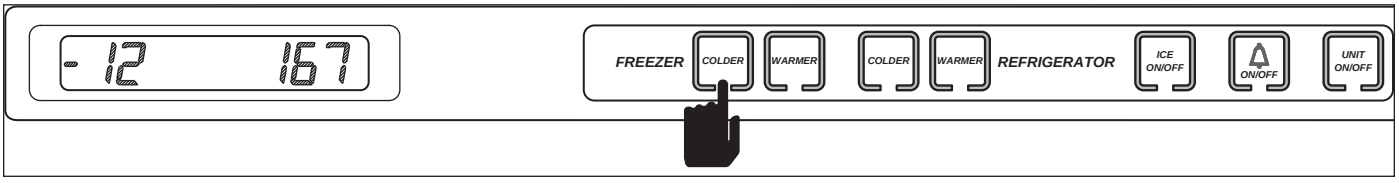

Figure 3-56. Toggle Down Through Indexes - Press COLDER Key in Consecutive Key Strokes

Temperature Log Event Indicators

The diagrams below illustrate possible event indicators that may be observed while in Temperature Log Recall Mode. (See Figures 3-57 through 3-60)

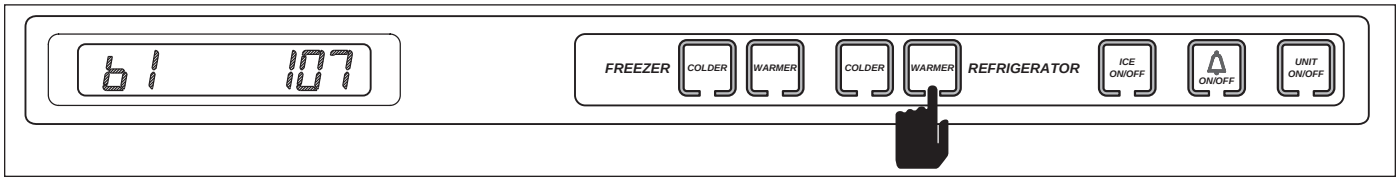

Figure 3-57. *"bl"* Indicates Index is "blank" - No Temperature has Been Logged Yet
(Only possible within first 14 days of unit operation, or after new control board is installed during service)

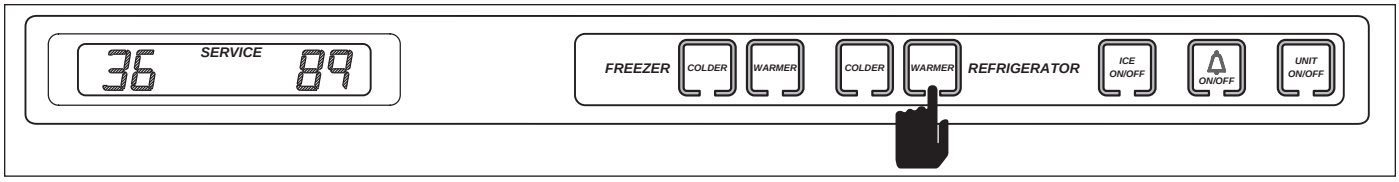

Figure 3-58. SERVICE Indicator Illuminates - Indicates Unit was switched OFF During that Index Period by Pressing UNIT ON/OFF Key

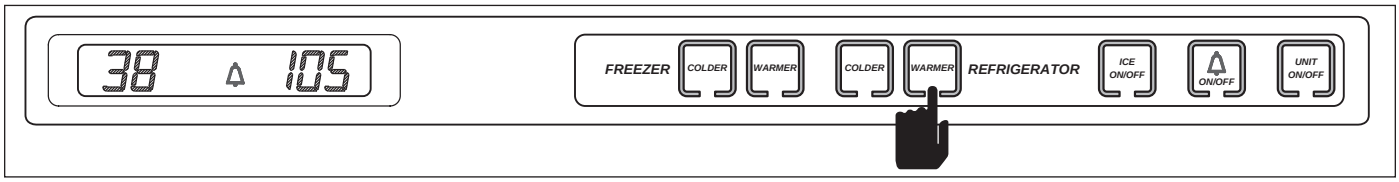

Figure 3-59. Bell Illuminates - Indicates Power Failure / Interruption During that Index Period

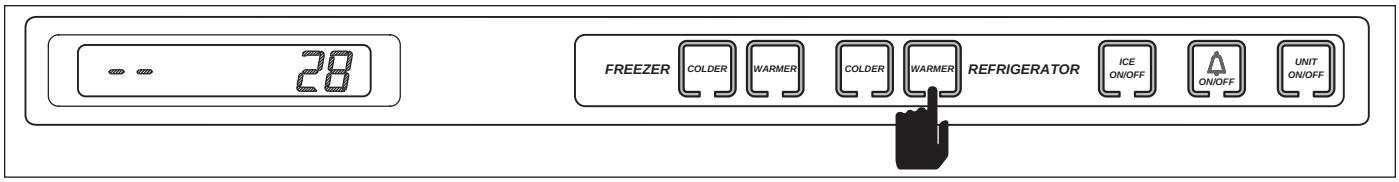

Figure 3-60. Double Dashes (- -) Displayed Instead of Temperature for Several Consecutive Index Periods - Indicates Bad EEPROM on Control Board. Board Must be Replaced

NOTE: *Double dashes will also be observed when in Manual Compartment Disable Mode. Only when double dashes are observed in Temperature Log Recall Mode for several consecutive indexes should the control board be replaced.*

NOTE: *If Manual Compartment Disable Mode has been activated during any of the 168 indexes, average temperatures will continue to be logged. No event indicator will appear with these temperatures.*

NOTE: *If the unit was in Showroom Mode during any of the 168 indexes, average temperatures will continue to be logged. No event indicator will appear with these temperatures.*

NOTE: *If the unit was switched OFF by pressing the UNIT ON/OFF key during any of the 168 indexes and there was still 115V AC supplied to the control board, the average temperatures will continue to be logged. This means temperatures would be expected to rise and the SERVICE indicator would be present in all indexes in which the unit was switched OFF.*

NOTE: *Temperature Log Recall Mode will end 20 seconds after the last key stroke.*

Temperature Log Index Chart

NOTE : *The chart below applies to the hours in which the control has power. Temperature history data will only be stored when the control has 115V AC supplied to it. If power to the unit is interrupted by switching the unit OFF at the UNIT ON/OFF key or due to a power failure, the average temperatures for that time period are stored with the event indicator. The temperature history data is stored in a non-volatile memory, so the data is not erased if power is interrupted.*

TEMPERATURE LOG INDEX CHART			
Index= Hours Past	**Index= Hours Past**	**Index= Hours Past**	**Index= Hours Past**
1 = 2 Hrs	43 = 86 Hrs	85 = 170 Hrs	127 = 254 Hrs
2 = 4 Hrs	44 = 88 Hrs	86 = 172 Hrs	128 = 256 Hrs
3 = 6 Hrs	45 = 90 Hrs	87 = 174 Hrs	129 = 258 Hrs
4 = 8Hrs	46 = 92 Hrs	88 = 176 Hrs	130 = 260 Hrs
5 = 10Hrs	47 = 94 Hrs	89 = 178 Hrs	131 = 262 Hrs
6 = 12 Hrs	48 = 96 Hrs *(4 Days)*	90 = 180 Hrs	132 = 264 Hrs *(11 Days)*
7 = 14 Hrs	49 = 98 Hrs	91 = 182 Hrs	133 = 266 Hrs
8 = 16 Hrs	50 = 100 Hrs	92 = 184 Hrs	134 = 268 Hrs
9 = 18 Hrs	51 = 102 Hrs	93 = 186 Hrs	135 = 270 hrs
10 = 20 Hrs	52 = 104 Hrs	94 = 188 Hrs	136 = 272 Hrs
11 = 22 Hrs	53 = 106 Hrs	95 = 190 Hrs	137 = 274 Hrs
12 = 24 Hrs *(1 Day)*	54 = 108 Hrs	96 = 192 Hrs *(8 Days)*	138 = 276 Hrs
13 = 26 Hrs	55 = 110 Hrs	97 = 194 Hrs	139 = 278 Hrs
14 = 28 Hrs	56 = 112 Hrs	98 = 196 Hrs	140 = 280 Hrs
15 = 30 Hrs	57 = 114 Hrs	99 = 198 Hrs	141 = 282 Hrs
16 = 32 Hrs	58 = 116 Hrs	100 = 200 Hrs	142 = 284 Hrs
17 = 34 Hrs	59 = 118 Hrs	101 = 202 Hrs	143 = 286 Hrs
18 = 36 Hrs	60 = 120 Hrs *(5 Days)*	102 = 204 Hrs	144 = 288 Hrs *(12 Days)*
19 = 38 Hrs	61 = 122 Hrs	103 = 206 Hrs	145 = 290 Hrs
20 = 40 Hrs	62 = 124 Hrs	104 = 208 Hrs	146 = 292 Hrs
21 = 42 Hrs	63 = 126 Hrs	105 = 210 Hrs	147 = 294 Hrs
22 = 44 Hrs	64 = 128 Hrs	106 = 202 Hrs	148 = 296 Hrs
23 = 46 Hrs	65 = 130 Hrs	107 = 214 Hrs	149 = 298 Hrs
24 = 48 Hrs *(2 Days)*	66 = 132 Hrs	108 = 216 Hrs *(9 Days)*	150 = 300 Hrs
25 = 50 Hrs	67 = 134 Hrs	109 = 218 Hrs	151 = 302 Hrs
26 = 52 Hrs	68 = 136 Hrs	110 = 220 Hrs	152 = 304 Hrs
27 = 54 Hrs	69 = 138 Hrs	111 = 222 Hrs	153 = 306 Hrs
28 = 56 Hrs	70 = 140 Hrs	112 = 224 Hrs	154 = 308 Hrs
29 = 58 Hrs	71 = 142 Hrs	113 = 226 Hrs	155 = 310 Hrs
30 = 60 Hrs	72 = 144 Hrs *(6 Days)*	114 = 228 Hrs	156 = 312 Hrs *(13 Days)*
31 = 62 Hrs	73 = 146 Hrs	115 = 230 Hrs	157 = 314 Hrs
32 = 64 Hrs	74 = 148 Hrs	116 = 232 Hrs	158 = 316 Hrs
33 = 66 Hrs	75 = 150 Hrs	117 = 234 Hrs	159 = 318 Hrs
34 = 68 Hrs	76 = 152 Hrs	118 = 236 Hrs	160 = 320 Hrs
35 = 70 Hrs	77 = 154 Hrs	119 = 238 hrs	161 = 322 Hrs
36 = 72 Hrs *(3 Days)*	78 = 156 Hrs	120 = 240 Hrs *(10 Days)*	162 = 324 Hrs
37 = 74 Hrs	79 = 158 Hrs	121 = 242 Hrs	163 = 326 hrs
38 = 76 Hrs	80 = 160 Hrs	122 = 244 Hrs	164 = 328 Hrs
39 = 78 Hrs	81 = 162 Hrs	123 = 246 Hrs	165 = 330 Hrs
40 = 80 Hrs	82 = 164 Hrs	124 = 248 Hrs	166 = 332 Hrs
41 = 82 Hrs	83 = 166 Hrs	125 = 250 Hrs	167 = 334 Hrs
42 = 84 Hrs	84 = 168 Hrs *(7 Days)*	126 = 252 Hrs	168 = 336 Hrs *(14 Days)*

HFC-134a REFRIGERANT SERVICE INFORMATION

The sealed systems in this series contain HFC-134a refrigerant. This section provides general rules for working with 134a, and procedures to be followed while servicing the sealed system. This is followed by diagrams illustrating sealed system operation, then model-specific refrigerant flow diagrams.

⚠ CAUTION

134a refrigerant requires Synthetic Ester oil in the compressor, and does not tolerate contamination from other refrigerants, moisture, petroleum-based lubricants, silicone lubricants, cleaning compounds, rust inhibitors, leak detection dyes, or any other type of additive.

General Rules for Working with 134a Refrigerant

- Use equipment dedicated to 134a sealed system service only.
- Use only 134a refrigerant for back-flushing and sweep charging.
- Always replace the filter-drier when servicing the sealed system.
- The filter-drier must be cut from the sealed system. Never un-braze the drier as the heat will drive moisture back into the sealed system.
- Do not leave sealed system nor replacement compressor open to the atmosphere for more than 10 minutes.
- When the rubber plugs are pulled from the service compressor, a release of pressure should be heard. If no release of pressure is heard, do not use the compressor.
- Use ONLY virgin 134a refrigerant when recharging the sealed system.

600-3 SERIES SEALED SYSTEM REPAIR PROCEDURES	
Problem	**Service Procedures**
Non-Operating, Inefficient, Noisy Compressor	a. Capture refrigerant b. Replace Compressor c. Replace filter-drier d. Evacuate or sweep charge system e. Recharge system with Virgin 134a refrigerant. *NOTE: To check for a non-operating compressor, a hard start kit can be used.*
High Side leak	a. Capture refrigerant. b. Repair leak. c. Replace filter-drier. d. Evacuate or sweep charge system. e. Recharge system with Virgin 134a refrigerant.
Low Side Leak	a. Capture refrigerant. b. Repair leak (if at solder joint) or replace part. c. Back flush high side of sealed system. d. If all refrigerant has escaped & system is in vacuum, replace compressor. e. Replace filter-drier. f. Evacuate or sweep charge system. g. Recharge system with Virgin 134a refrigerant.
Contaminated Sealed System *Examples:* > *Burned out compressor* > *Excessive moisture from leak in condensate loop or in low side* > *Plugged capillary tube*	a. Capture refrigerant. b. Repair leak (if at solder joint) or replace part. c. Back flush high side of sealed system. d. Replace compressor. e. Replace filter-drier. f. Replace heat exchanger if cap tube is clogged. g. Install a low side drier on suction line. h. Evacuate or sweep charge sealed system. i. Recharge with Virgin 134a refrigerant.
Restriction *NOTE: If restriction is due to sealed system being contaminated, see Contaminated Sealed System above.*	a. Capture refrigerant. b. Locate and remove restriction or locate and replace part. c. Back flush high side of sealed system. d. Replace filter-drier. e. Evacuate or sweep charge system. f Recharge system with Virgin 134a refrigerant.
Overcharge	a. Capture refrigerant. b. Replace filter-drier. c. Evacuate or sweep charge system. d. Recharge system with Virgin 134a refrigerant.

SEALED SYSTEM OPERATION

The following six diagrams illustrate a basic sealed system. The components are listed in order of refrigerant flow, with an explanation of their fundamental role as part of a sealed system. ***NOTE:*** *These illustrations do not represent any specific 600-3 Series sealed system.*

Compressor (Figure 4-1)
The compressor creates a high side and low side pressure difference in the sealed system by compressing the refrigerant gas, thus raising the pressure and temperature. The compressor pushes this high-pressure/high-heat gas through the door gasket seat heater loop to prevent sweating (on most units the gas also travels through drain pan heater tubing to help evaporate water in the drain pan). The high-pressure/high-heat gas then travels to the condenser.

Condenser (Figure 4-2)
The high-pressure/high-heat gas travels through the condenser, where the heat is dissipated by cooler air being drawn over the condenser tubing by the condenser fan. This changes the gas into a high-pressure/warm liquid that then enters the high-side filter-drier.

High-Side Filter-Drier (Figure 4-3)
The high-pressure/warm liquid travels through the high-side filter-drier, which removes moisture from the refrigerant before it enters the capillary tube.

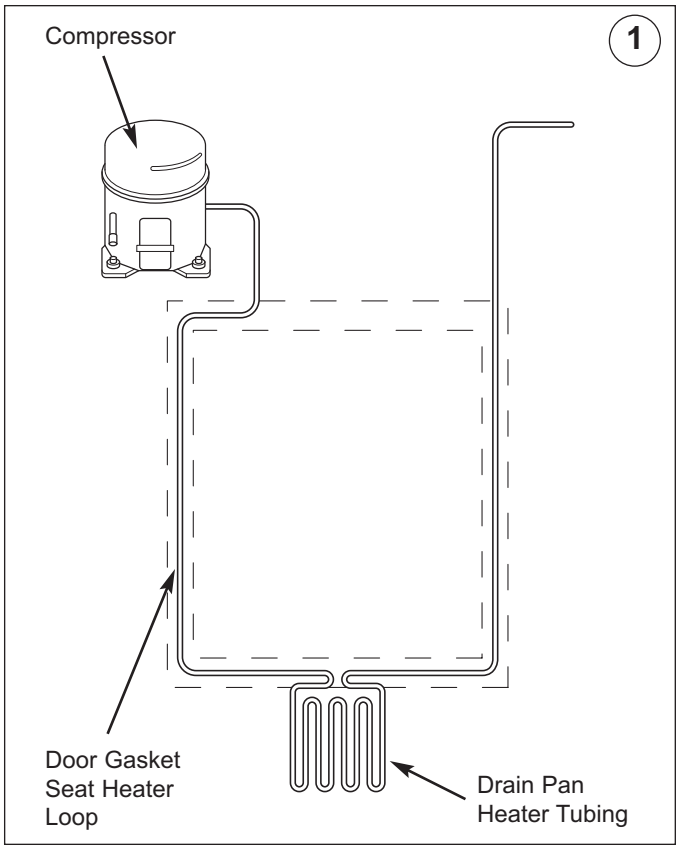

Figure 4-1. Compressor

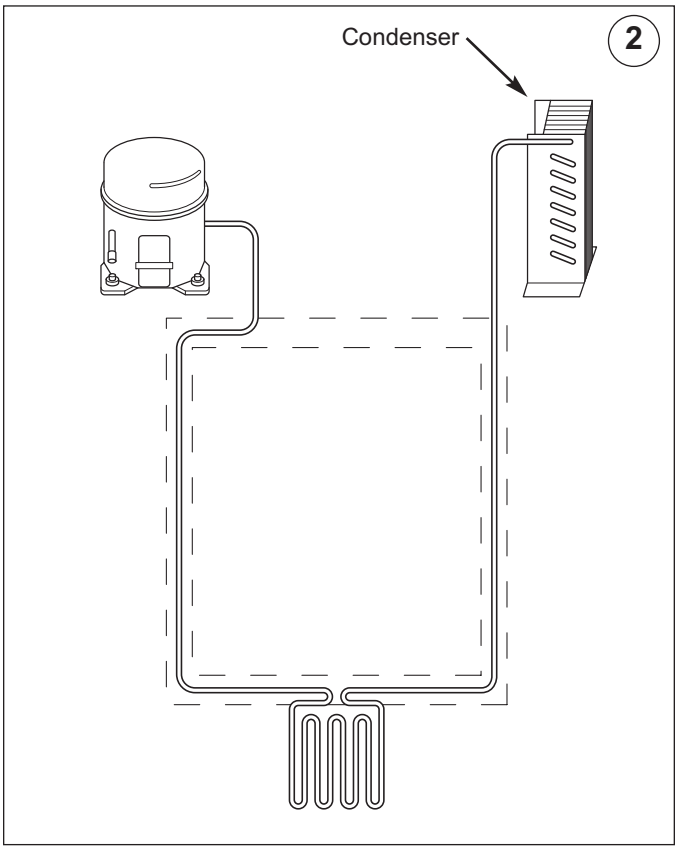

Figure 4-2. Condenser

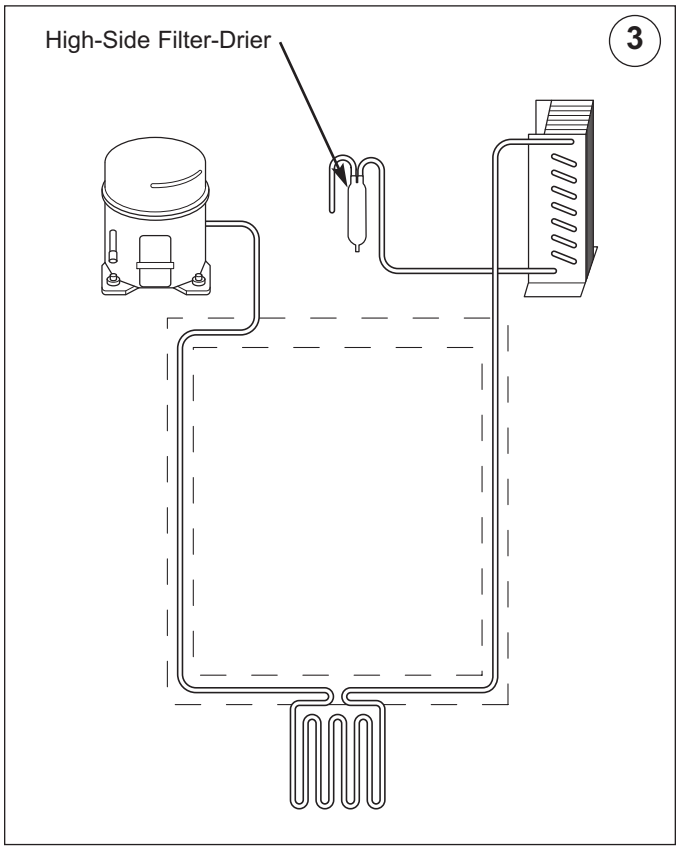

Figure 4-3. High-Side Filter-Drier

Capillary Tube (Part of Heat Exchanger) (Figure 4-4)
The high-pressure/warm liquid refrigerant travels through the long skinny capillary tube which is attached to the suction line. (These two tubes soldered together create the heat exchanger.) As the high-pressure/warm liquid refrigerant travels through the capillary tube it gives up heat to the cool refrigerant gas traveling through the suction line and the pressure drops, so it is a low-pressure/cool liquid before it enters the evaporator.

Evaporator (Figure 4-5)
As the low-pressure/cool liquid refrigerant enters the evaporator, it vaporizes. This is caused by a dramatic pressure change which occurs when the refrigerant enters the larger diameter evaporator tubing from the smaller diameter capillary tubing. This vapor travels through the evaporator absorbing heat from the compartment, gradually converting it to a cool gas. This cool gas then enters the suction line.

Suction Line (& Heat Exchanger) (Figure 4-6)
The cool gas travels through the suction line which is attached to the capillary tube. (As mentioned earlier, these two tubes soldered together create the heat exchanger.) As this cool refrigerant gas travels through the suction line it absorbs heat from the warm liquid refrigerant traveling through the capillary tube, making it a luke warm gas. The lukewarm refrigerant gas returns to the compressor where the process begins again.

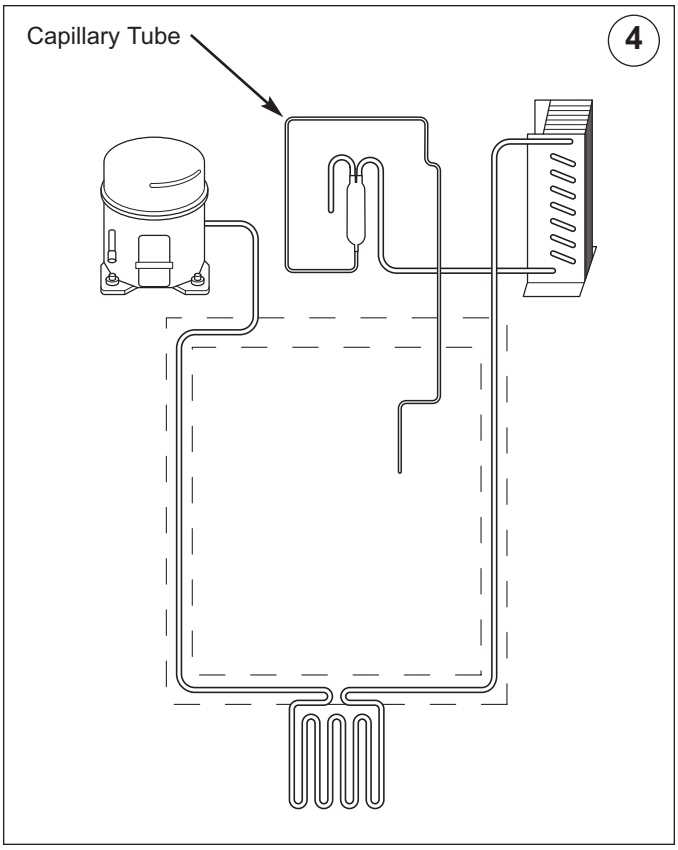

Figure 4-4. Capillary Tube (Part of Heat Exchanger)

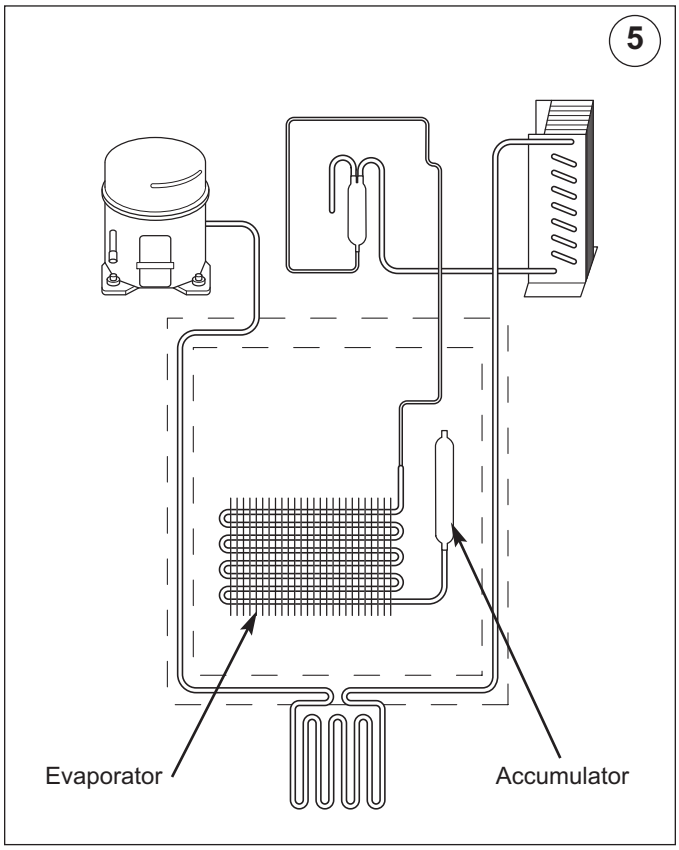

Figure 4-5. Evaporator

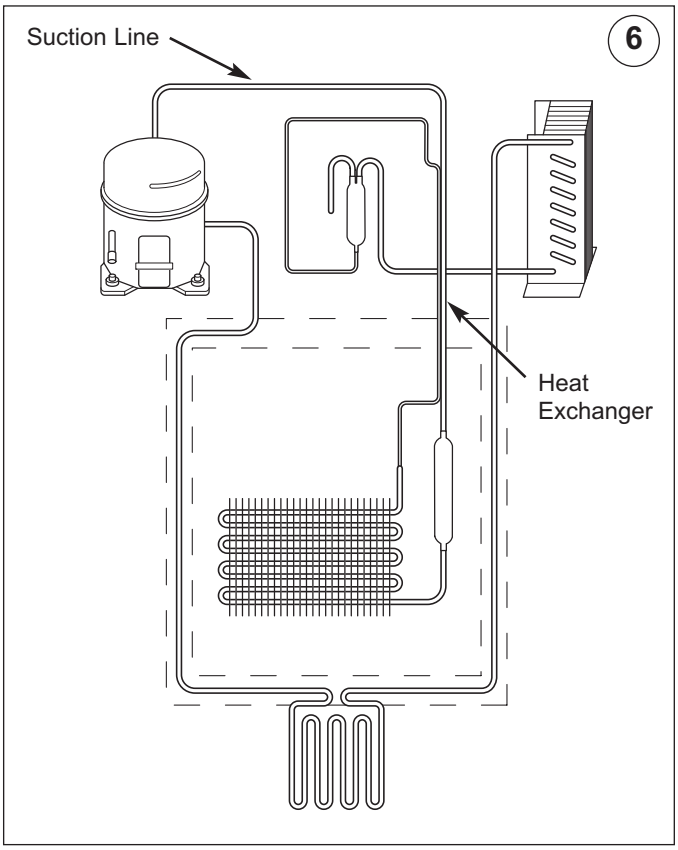

Figure 4-6. Suction Line (Part of Heat Exchanger)

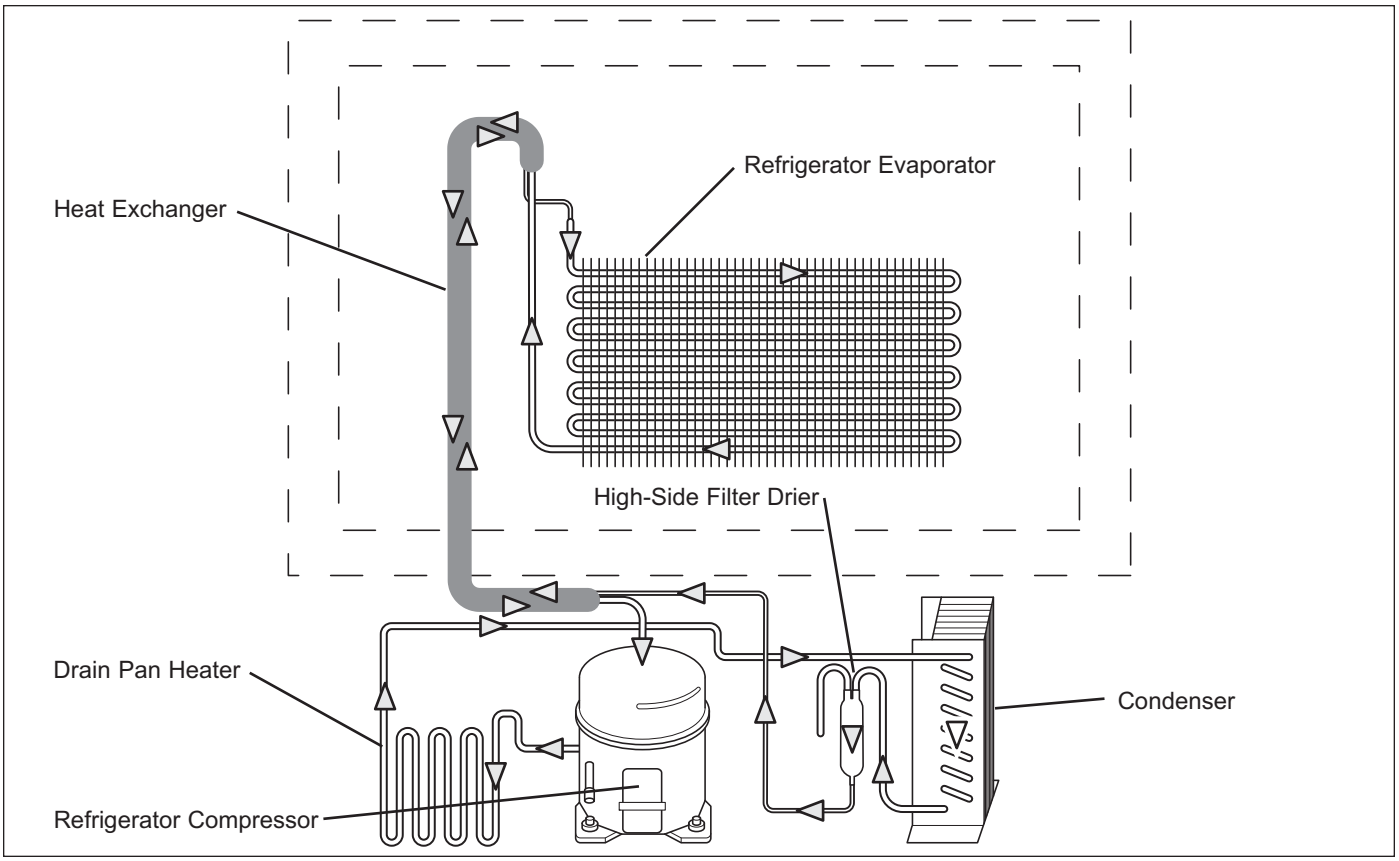

Figure 4-7. Models 601R-3, 601RG-3 Refrigerant Flow

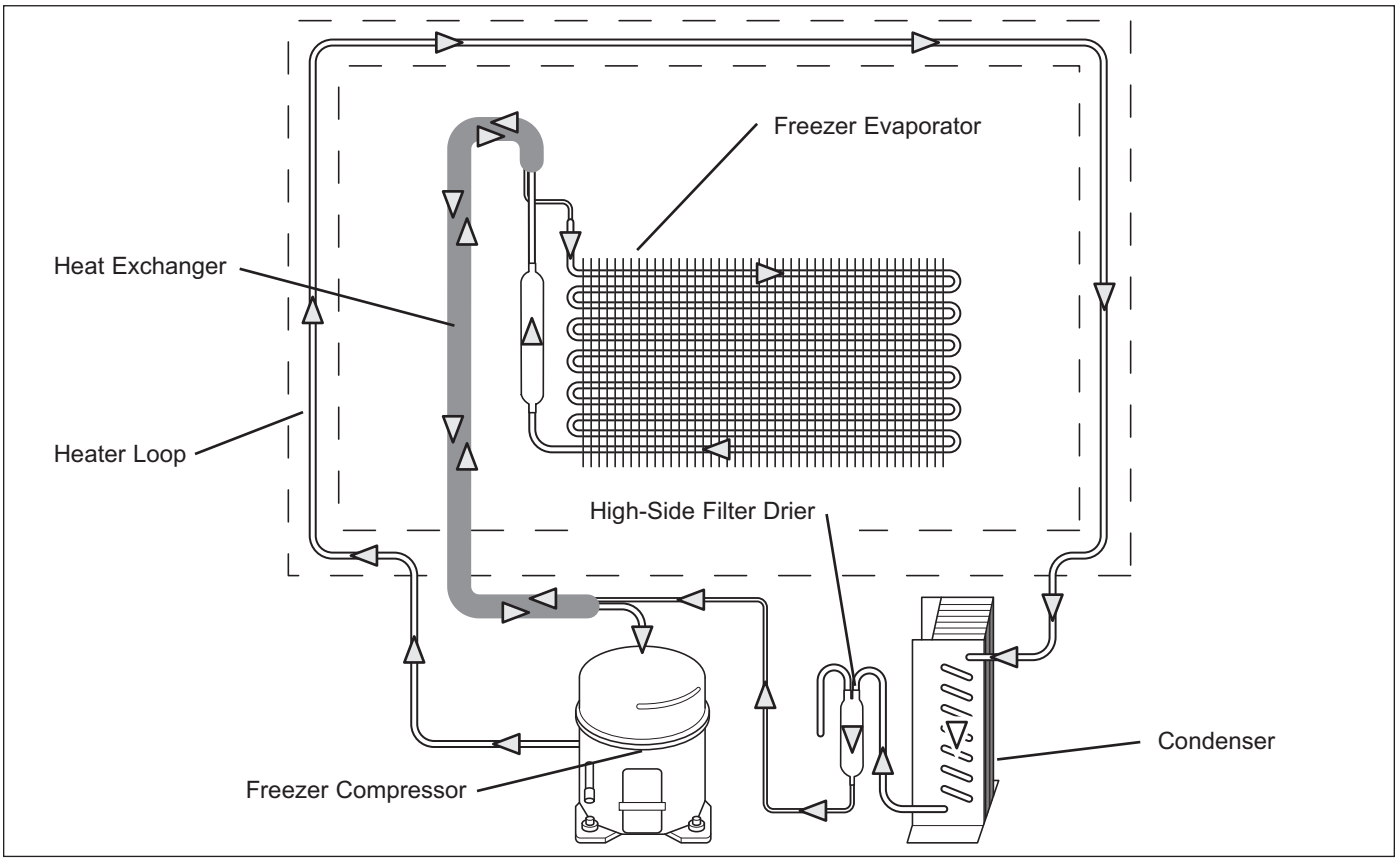

Figure 4-8. Model 601F-3 Refrigerant Flow

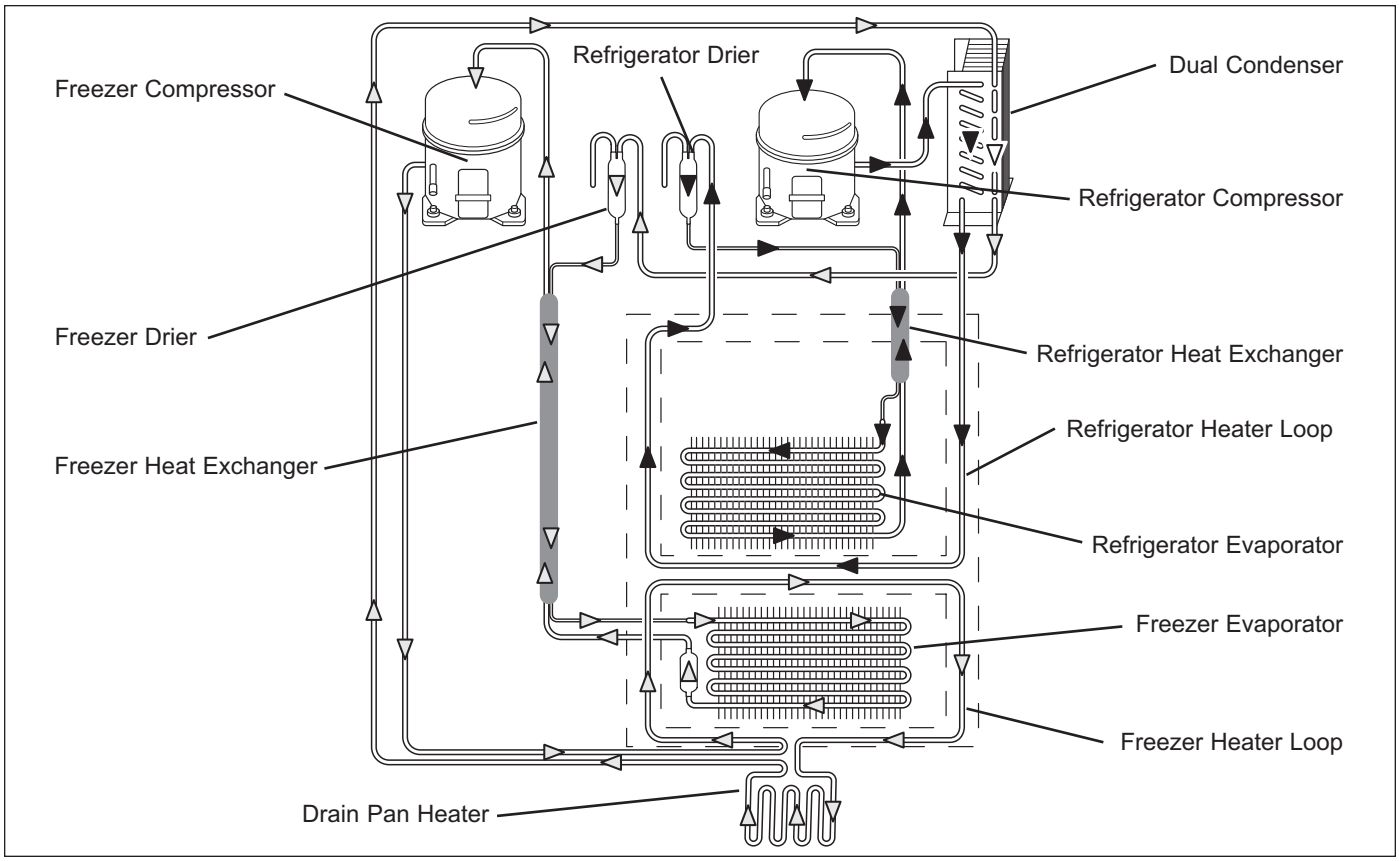

Figure 4-9. Models 611-3, 611G-3, 650-3, 650G-3 Refrigerant Flow

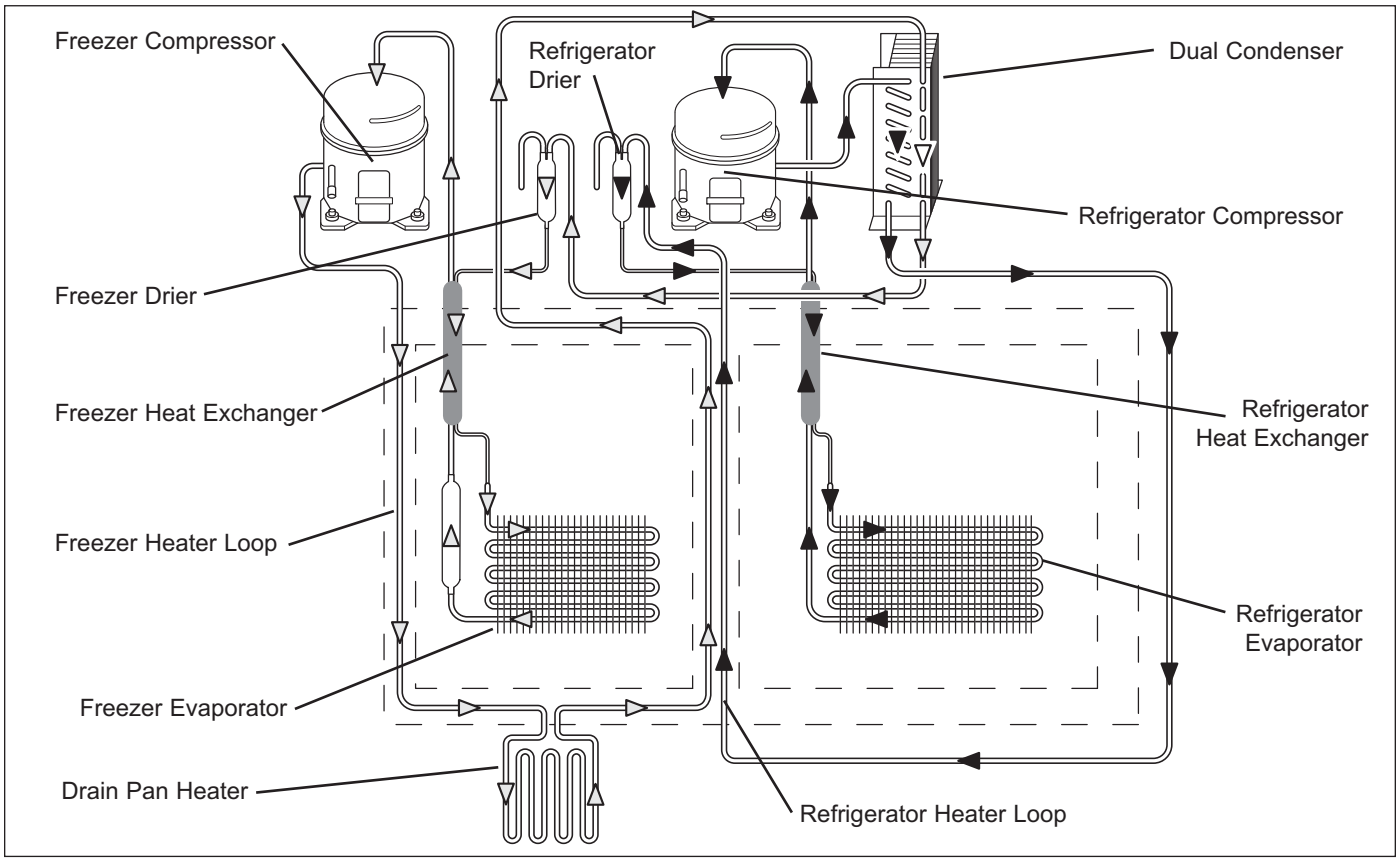

Figure 4-10. Models 632-3, 642-3, 661-3, 685-3, 695-3 Refrigerant Flow

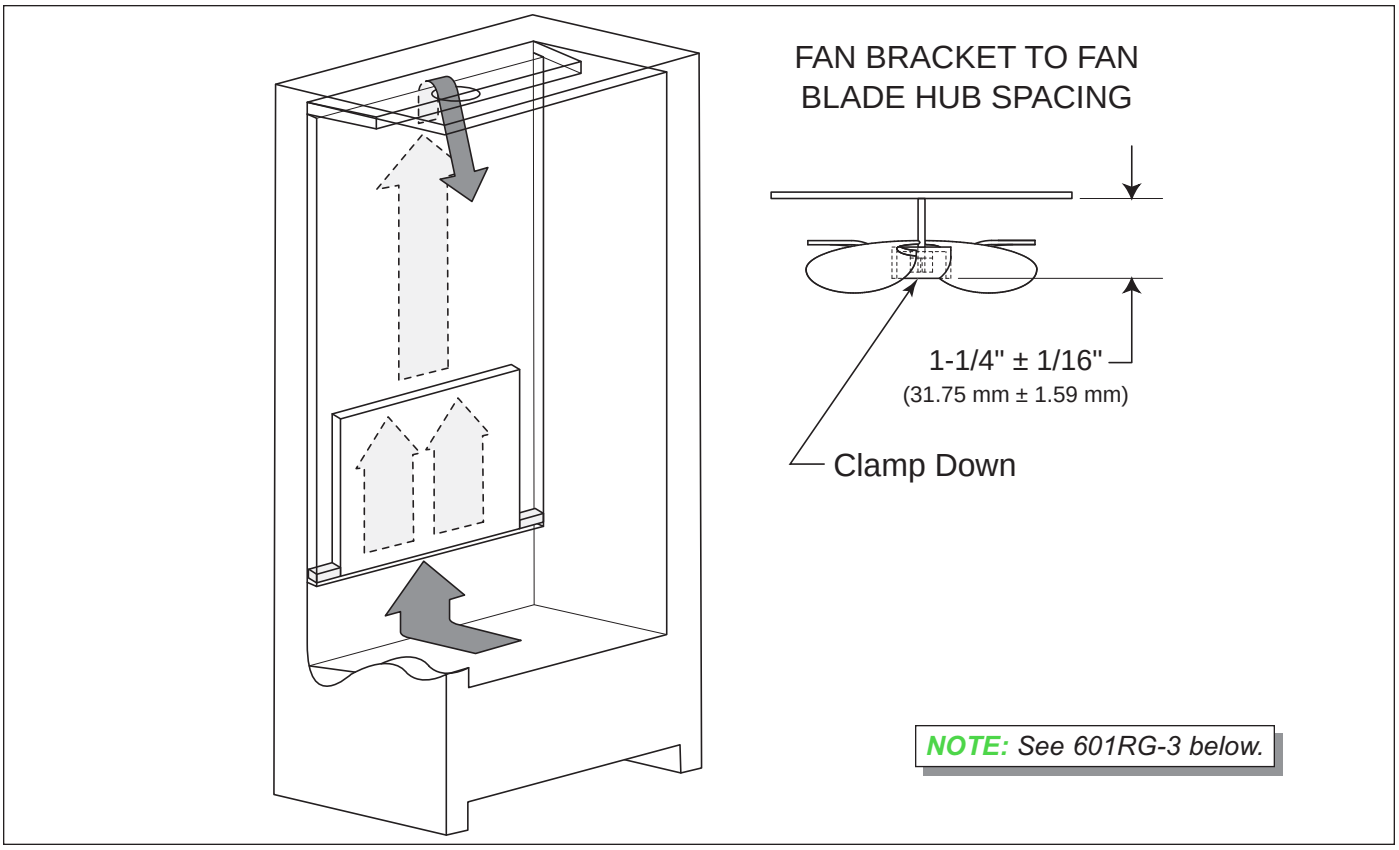

Figure 5-1. Air Flow and Fan Blade Spacing, Model 601R-3

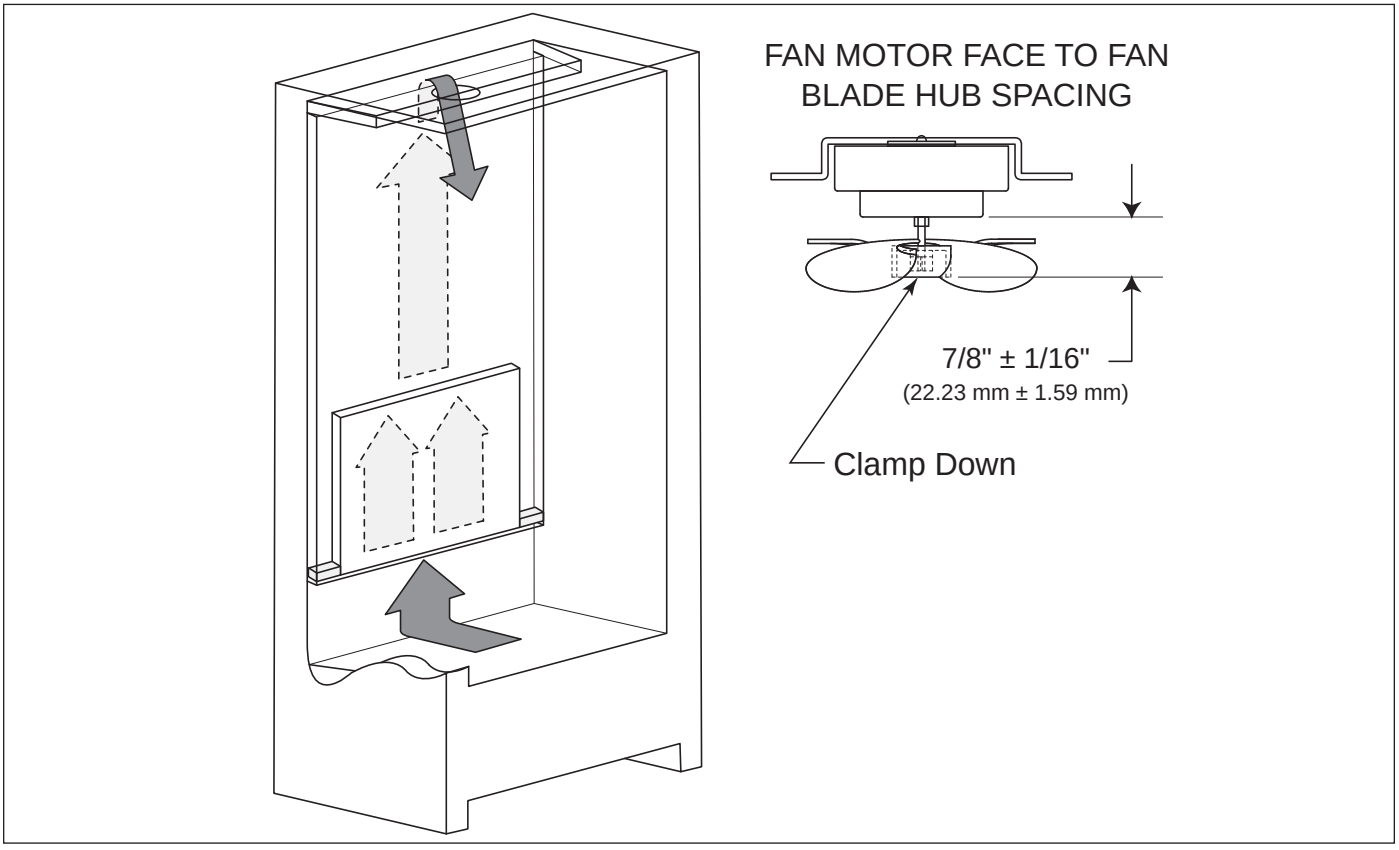

Figure 5-2. Air Flow and Fan Blade Spacing, Model and 601RG-3

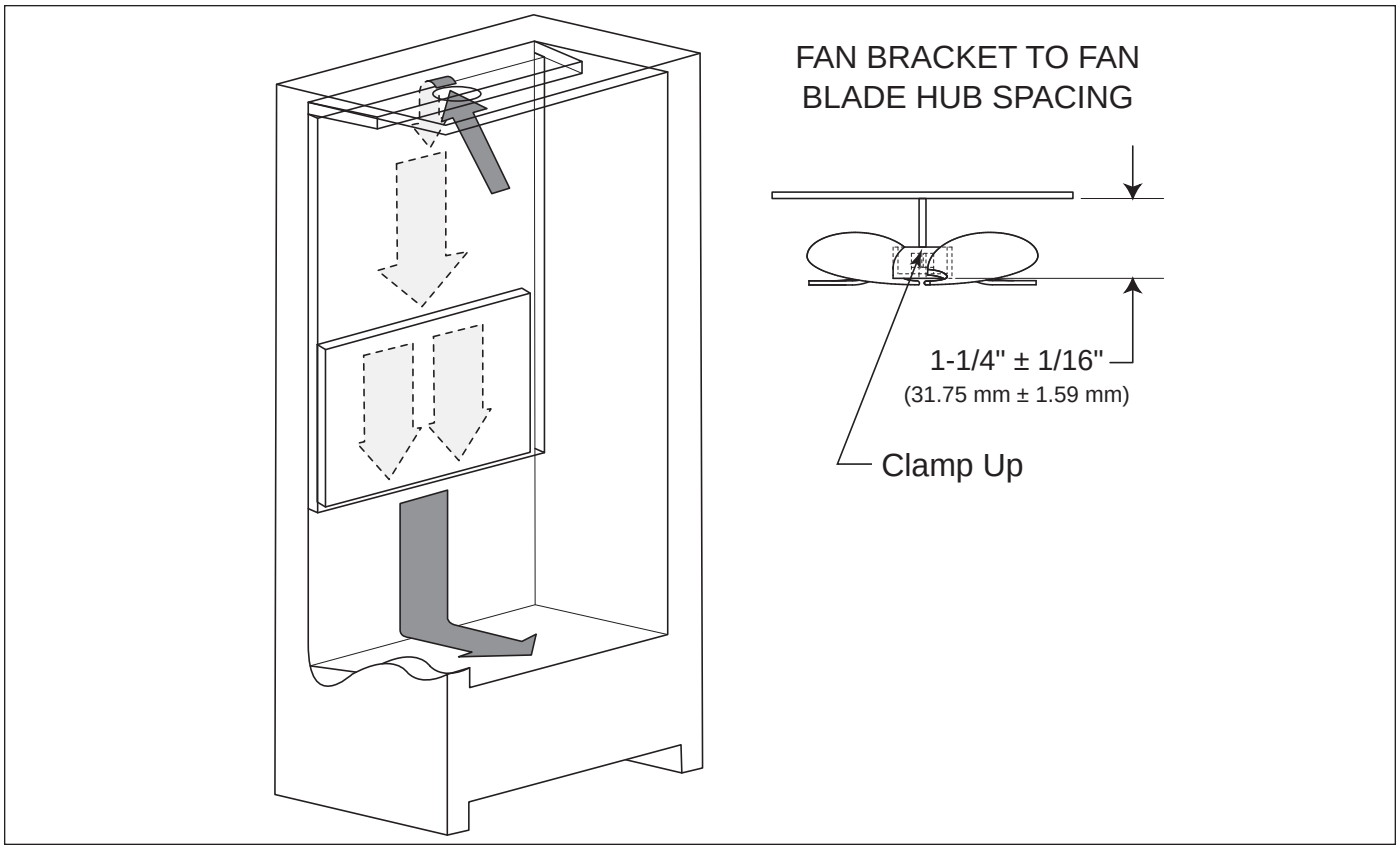

Figure 5-3. Air Flow and Fan Blade Spacing, Model 601F-3

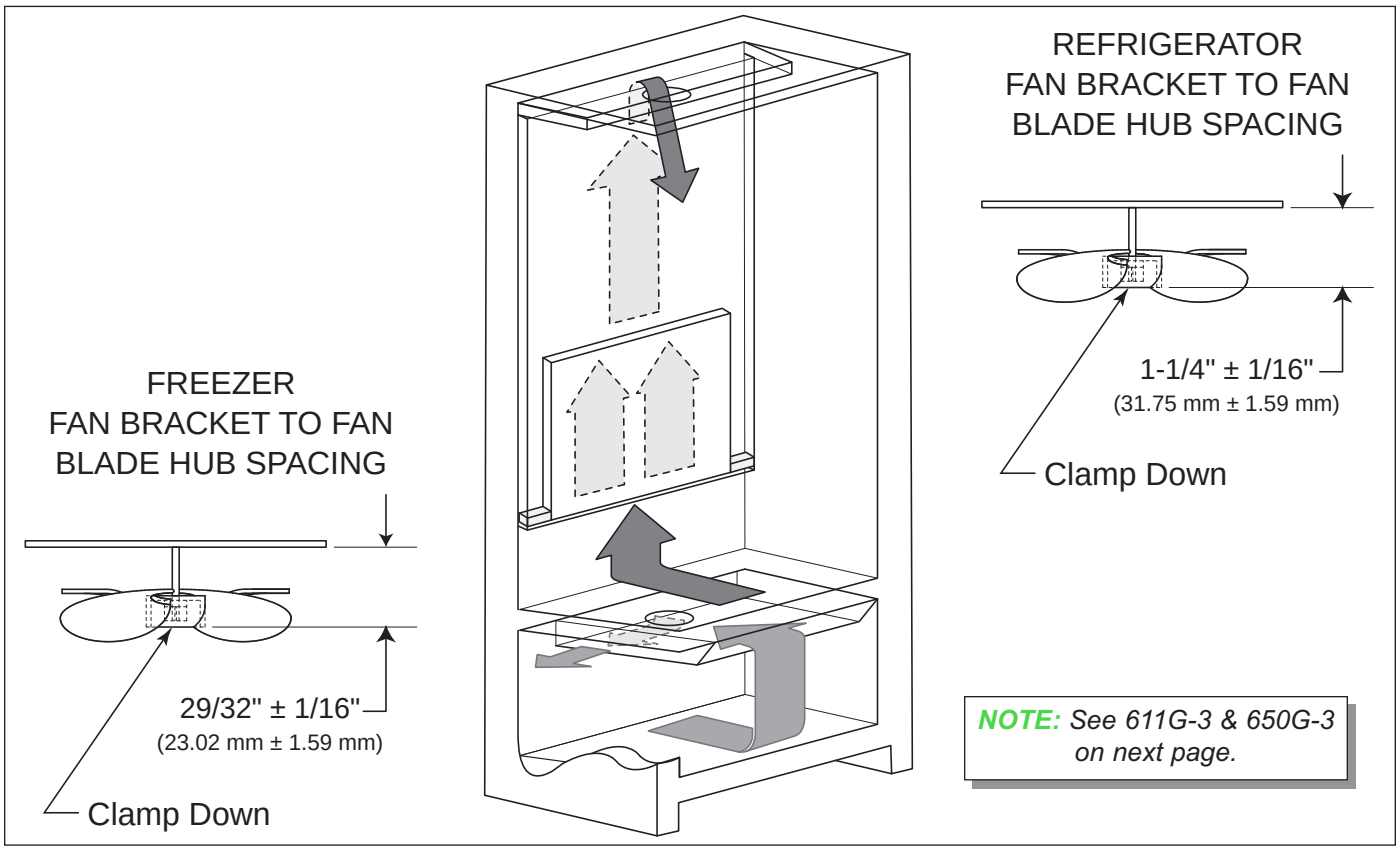

Figure 5-4. Air Flow and Fan Blade Spacing, Models 611-3 and 650-3

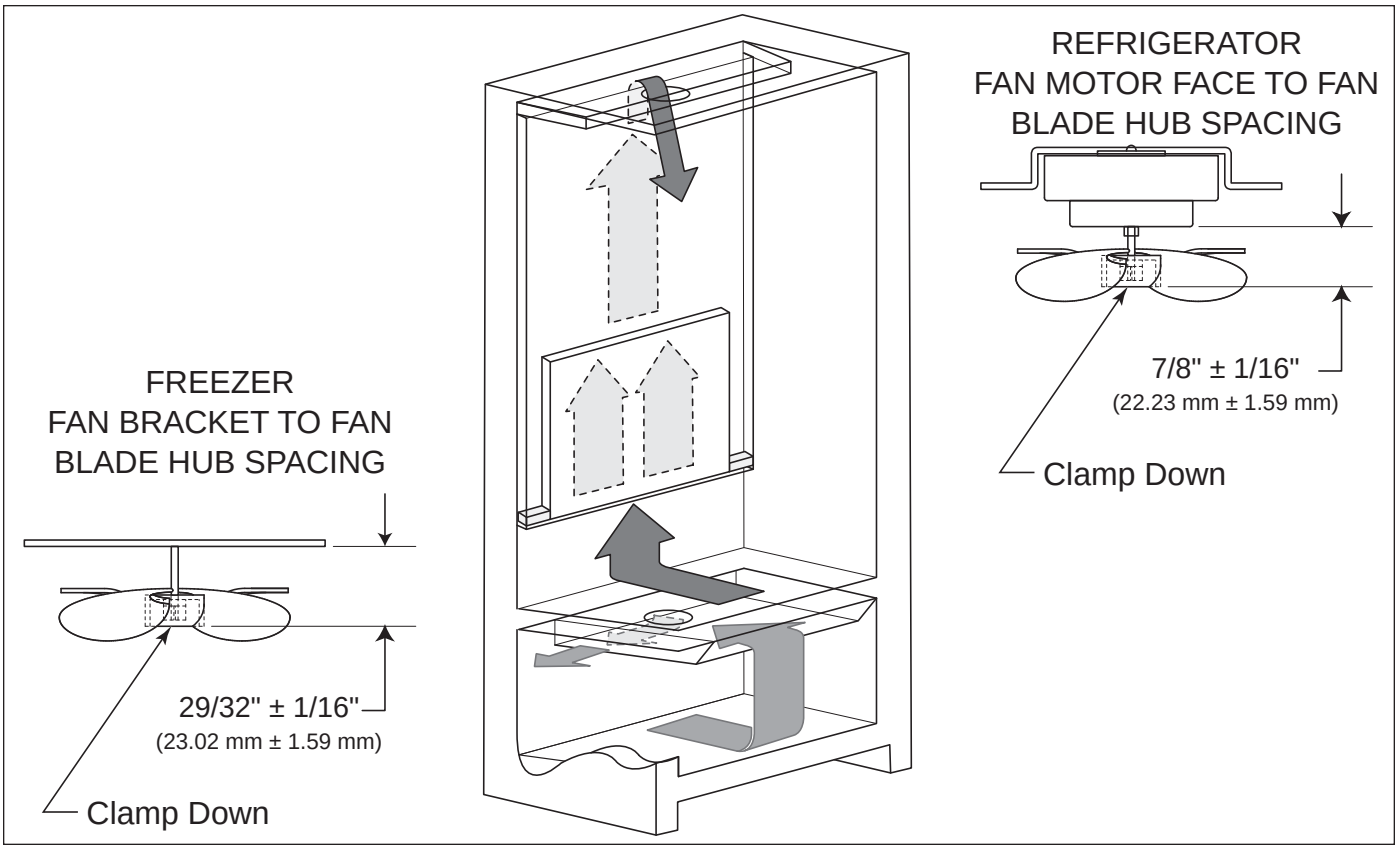

Figure 5-5. Air Flow and Fan Blade Spacing, Models 611G-3 and 650G-3

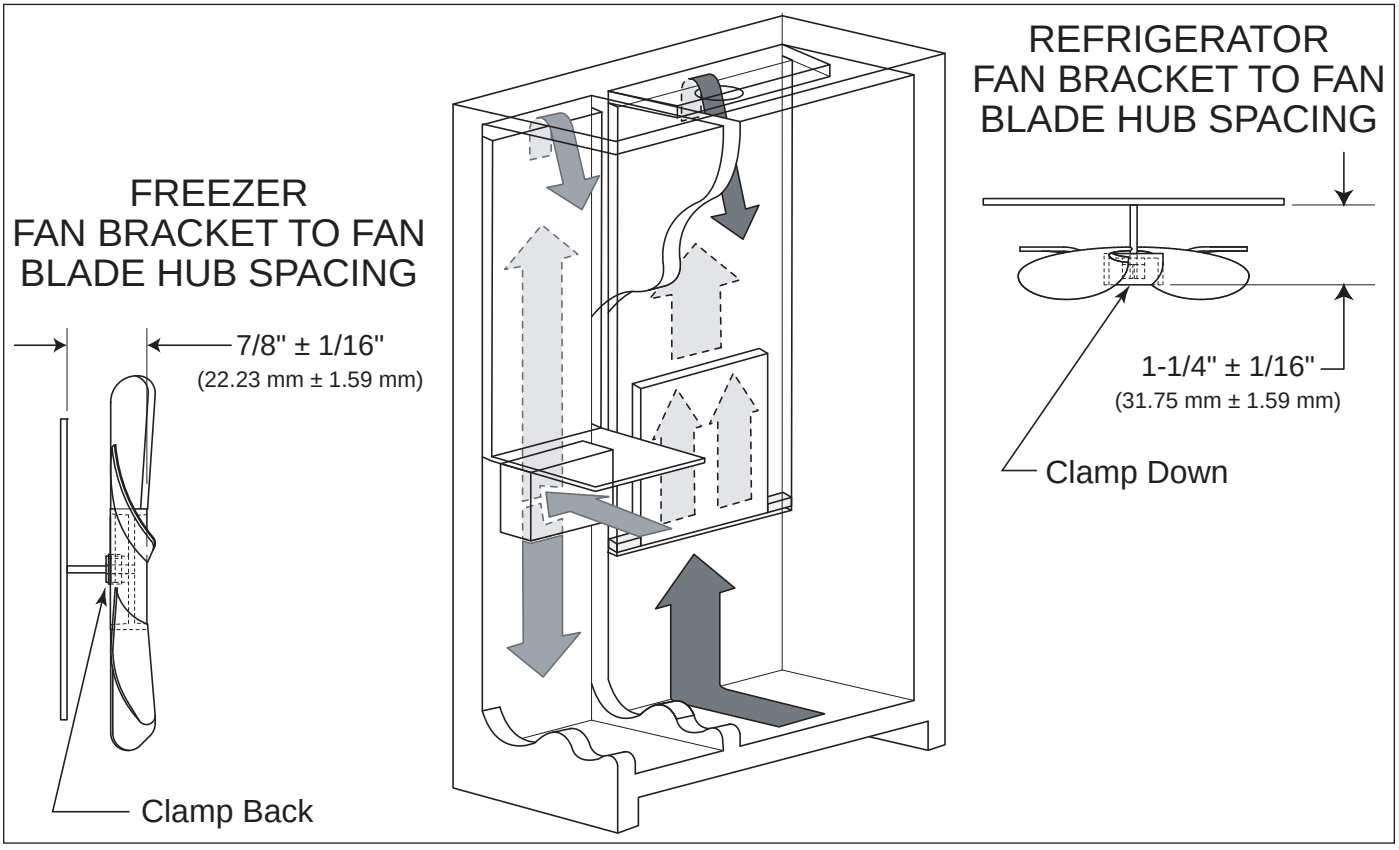

Figure 5-6. Air Flow and Fan Blade Spacing, Models 632-3 and 642-3

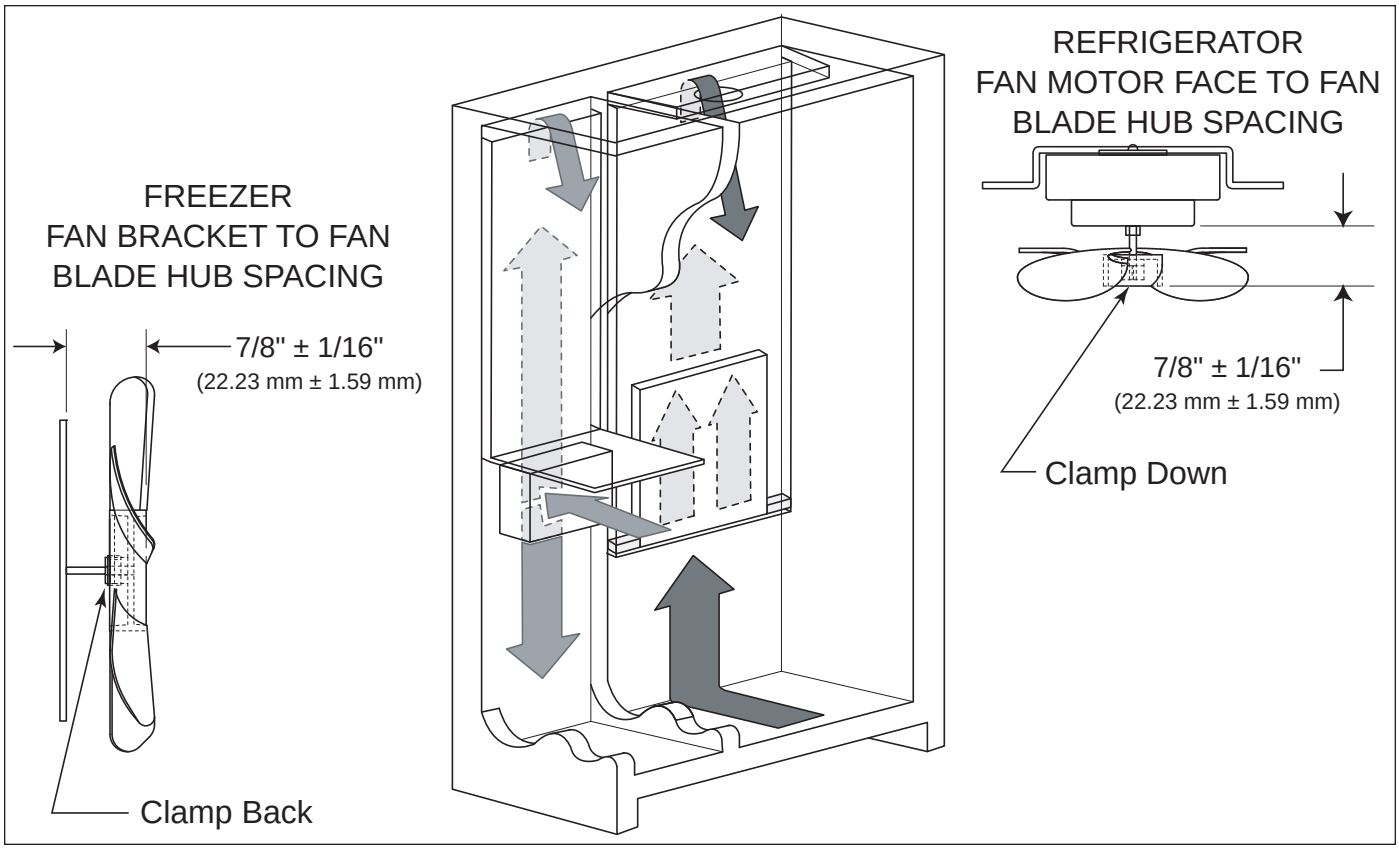

Figure 5-7. Air Flow and Fan Blade Spacing, Models 661-3

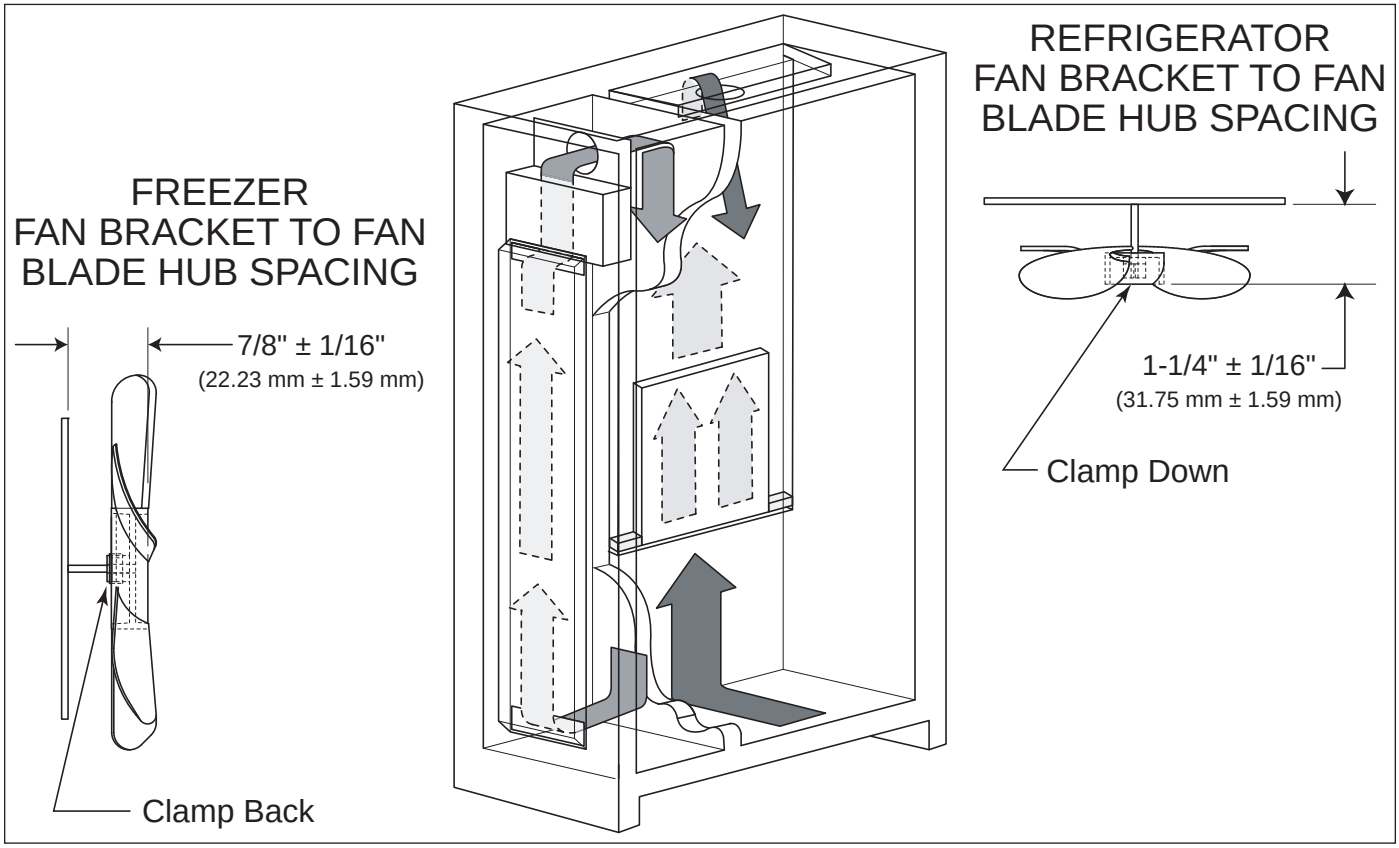

Figure 5-8. Air Flow/Fan Blade Space, Models 685-3 and 695-3

ICEMAKER SYSTEM INFORMATION

600-3 Series units utilizes a MidSouth ® icemaker, or a Japan-Servo ® icemaker, for which the operating characteristics of each are similar.

Icemaker operation is not complex, but its components and operation cycle should be understood by a Service Technician in order to make proper diagnosis.

⚠ WARNING

TO AVOID ELECTRIC SHOCK, ALWAYS DISCONNECT ELECTRICAL POWER TO UNIT WHEN SERVICING ICEMAKER.

NOTE: *The ICE ON/OFF key at the control panel activates the icemaker system. If "ICE" is not displayed on the LCD, the icemaker system is off.*

NOTE: *To allow ice to freeze fully and reduce effects of low water pressure, the electronic control disables the icemaker system for 45 minutes after each ice harvest.*

NOTE: *The ice bucket in models 601F-3, 611-3, 611G-3, 650-3 and 650G-3, have a tab at left rear corner that activates a switch when the ice bucket is in place. The ice bucket in the models 685-3 and 695-3 also activates a switch when in place. If the ice bucket is not in proper position on any model, ice production will stop.*

NOTE: *The defrost relay on the control board controls the fill tube heater.*

ICEMAKER COMPONENTS

Following are descriptions that explain the function of each icemaker component. The components are diagramed in Figure 6-1 on the next page.

Support **-** The support is the housing around the electrical components and wire connections. The support is attached to the ice mold.

Mounting Plate **-** The drive motor, holding switch, water valve solenoid switch, timing gear, timing cam and water fill adjusting screw are attached to the metal mounting plate. The mounting plate is then attached to the support.

Drive Motor **-** 115 volts AC supplied to the drive motor causes the motor to operate. The motor has a single output shaft with a small gear. The motor gear drives/spins the timing gear.

Timing Gear **-** The timing gear is driven/spun by the drive motor gear and is attached to the timing cam.

Timing Cam **-** The timing cam is attached to the timing gear and the ice ejector is inserted into the center of the timing cam. As the timing cam rotates, high and low spots on the cam operate the water valve solenoid switch and the holding switch. The timing cam also moves the lever arm side to side and rotates the ice ejector.

Ice Mold **-** The ice mold is where the eight crescent shaped ice cubes are formed.

Mold Heater **-** The mold heater uses 165 watts to thaw the ice free from the mold.

Ice Ejector **-** The drive end of the ice ejector is "D" shaped to fit into the "D" shaped hole in the timing cam. It has eight blades which rotate and sweep the ice from the mold cavities during the ejection phase of the cycle.

Ice Stripper **-** The stripper is attached to the dumping side of the mold, serving as a decorative side cover and it also prevents ice from falling back into the mold.

Bearing / Inlet **-** The bearing / inlet is attached to the ice mold, opposite the support. Water enters the bearing / inlet and is directed to the ice mold. The bearing/inlet also supports the ice ejector at the end opposite the timing cam.

Thermostat **-** The thermostat is a single-pole, single-throw, bi-metal switch. At 15°F (-9°C) ± 3° it closes, starting the ice ejection phase.

Thermal-Mastic **-** A substance similar in appearance to grease that is applied between the thermostat and the ice mold. Its purpose is to increase thermal conductivity between the mold and the thermostat.

Lever Arm and Shut-off Arm **-** The lever arm is moved side to side by two revolutions of the timing cam. As it moves, it raises and lowers the shut-off arm and operates the shut-off switch to control the quantity of ice production. If the shut-off arm comes to rest on top of the ice in the storage bin during either revolution, the shut-off switch will remain open, stopping ice production at the end of that revolution.

Water Valve Solenoid Switch **-** A single-pole, double-throw type switch that allows electricity to the water valve solenoid, opening the valve, during the fill cycle.

Holding Switch **-** A single-pole, double-throw type switch that assures completion of a revolution once the icemaker has been energized.

Shut-off Switch **-** A single-pole, double-throw type switch that stops ice production when the ice bin is full.

TCO (Thermal Cut Out) **-** The TCO is thermal protection device in the wire harness that would open in the event of mechanical failure, thus protecting against over heating. (The TCO is not shown in diagram.)

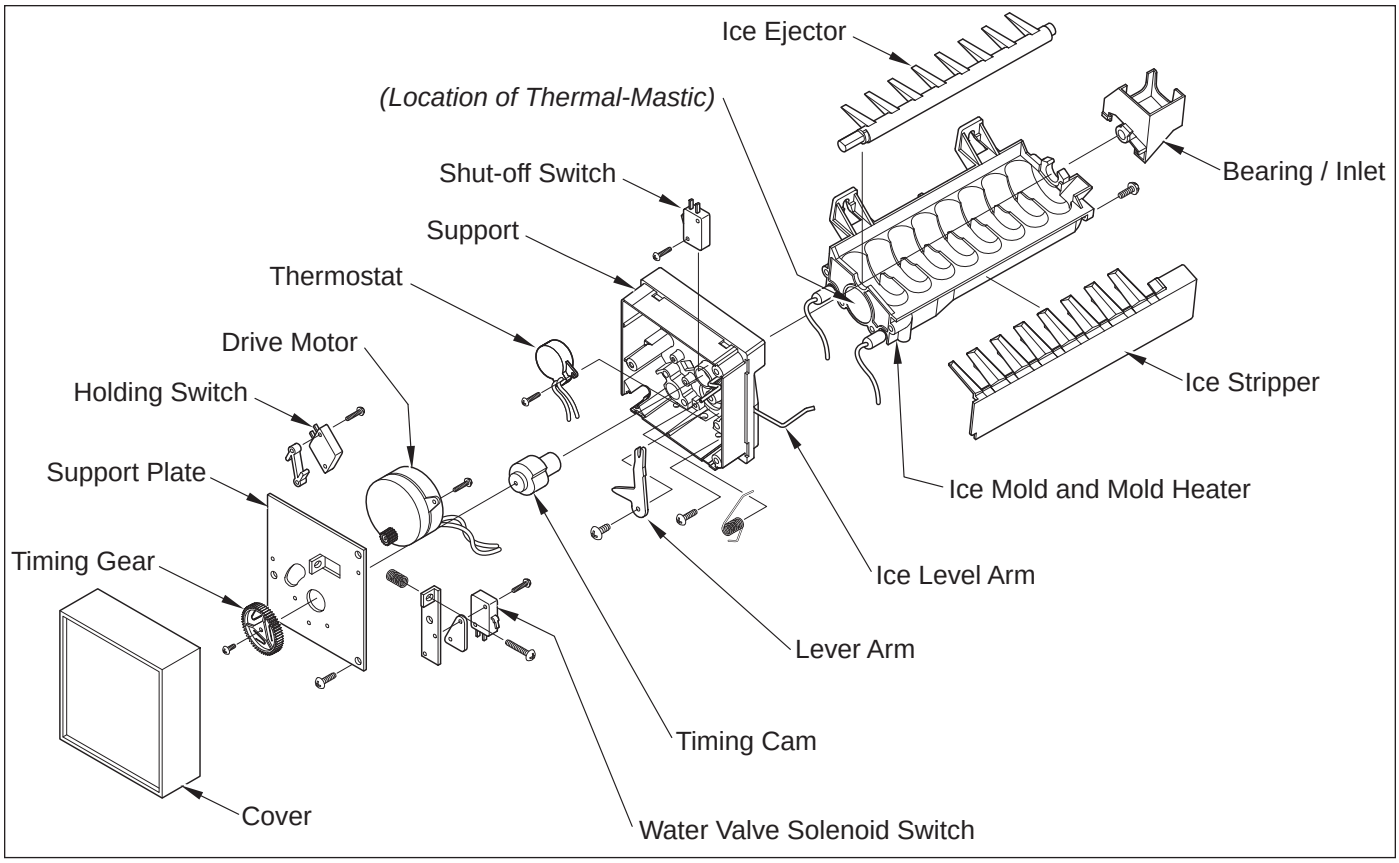

Figure 6-1. Diagram of Icemaker Components
(For reference only. Most individual components of are not available for Service. If problems with the icemaker are discovered, the entire icemaker should be replaced)

ICEMAKER OPERATION

The following series of electrical schematics illustrate a typical icemaker cycle of operation. Below each schematic is a diagram indicating the approximate location of the ice ejector and ice level arm during the phase the schematic indicates.

Freeze Phase of Ice Making Cycle **(See Figure 6-2)**

- The ice mold is filled with water.
- The thermostat is open.
- No icemaker components are energized.

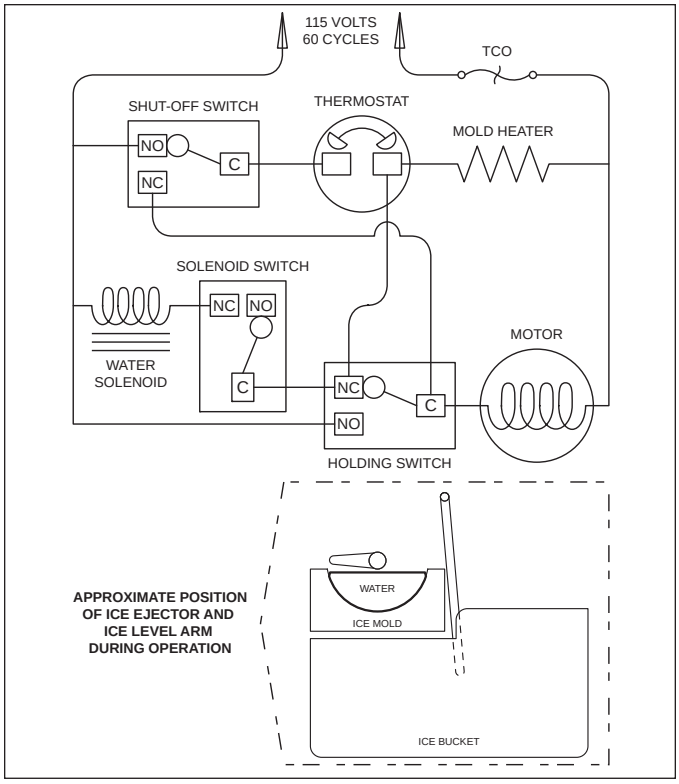

Figure 6-2. The Freeze Phase

Start of the First Revolution **(See Figure 6-3)**

- The water in the ice mold has turned to ice.
- At 15°F (-9°C) ± 3° the thermostat closes.
- The mold heater is energized through the thermostat.
- The drive motor is started through the thermostat and "normally closed" terminal of the holding switch.
- The ice ejector begins to turn and the shut-off arm begins to rise.

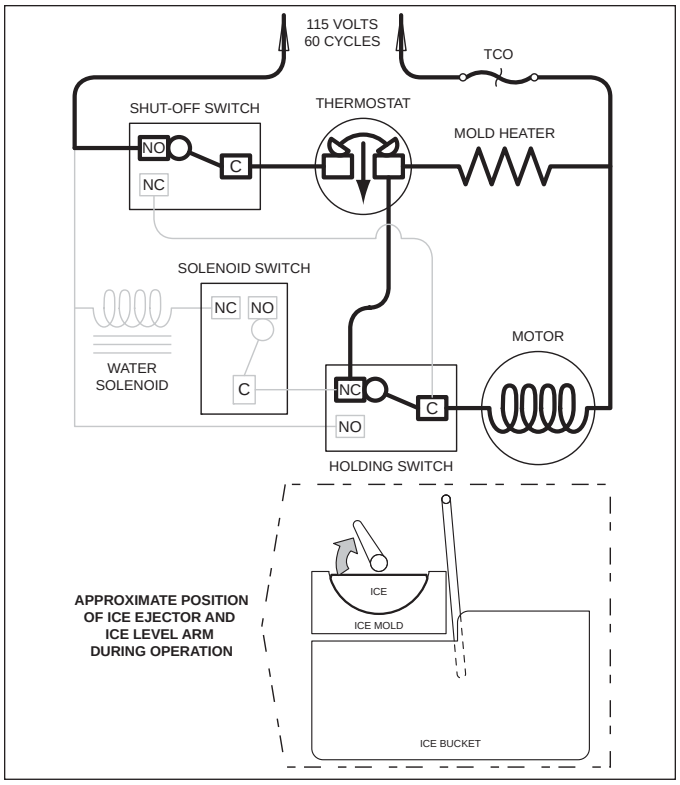

Figure 6-3. Start of First Revolution

First Revolution Continued **(See Figure 6-4)**

- The holding switch is tripped by the timing cam to "normally open" thus holding power to the motor.
- The mold heater remains energized through the thermostat.
- The shut-off arm begins to rise.

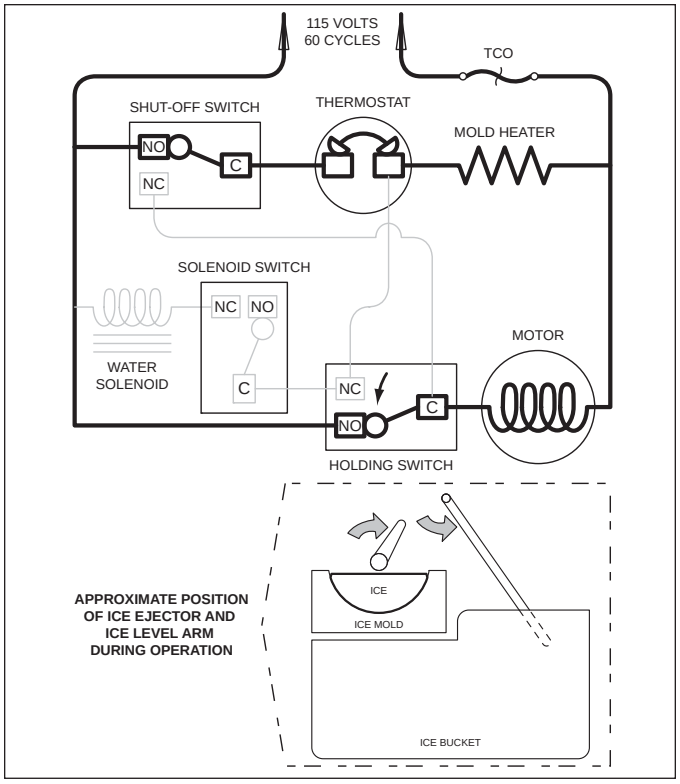

Figure 6-4. First Revolution Continued

First Revolution Continued **(See Figure 6-5)**

- The ice ejector reach the ice in the mold.
- The ice releases from the mold as the ejector blades begin to rotate the cubes out.
- The drive motor remains energized through the holding switch.
- The mold heater remains energized through the thermostat.
- As the shut-off arm rises, the shut off switch is tripped to “normally closed”, and then the shut-off arm begins to lower.

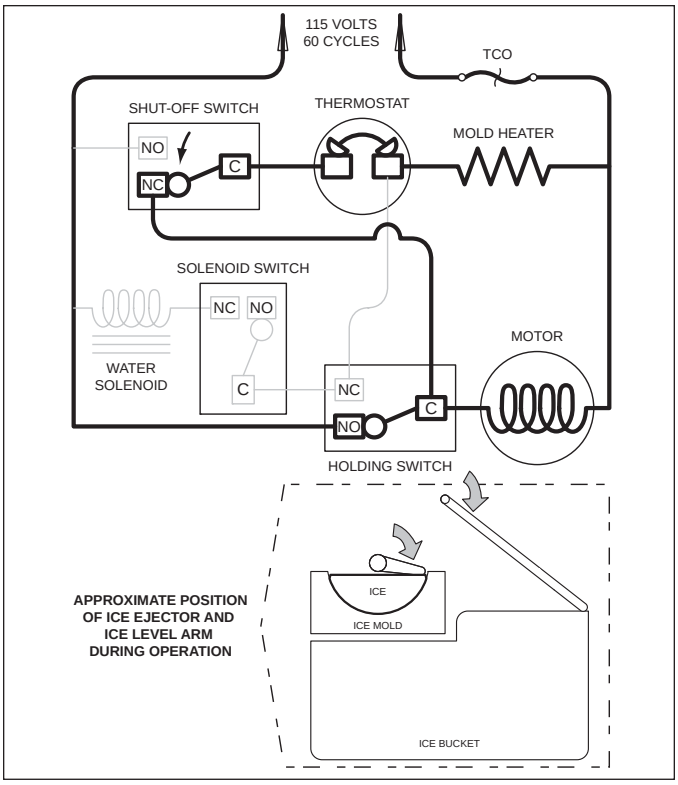

Figure 6-5. First Revolution Continued

First Revolution Continued **(See Figure 6-6)**

- The ice has released from the mold.
- The motor remains energized through the holding switch.
- The shut-off arm is lowered and the shut off switch is tripped to “normally open”.
- The water valve solenoid switch is tripped by the timing cam, but the solenoid is not energized because the thermostat is still closed and energizing the mold heater. (Electric current follows the path of least resistance.)

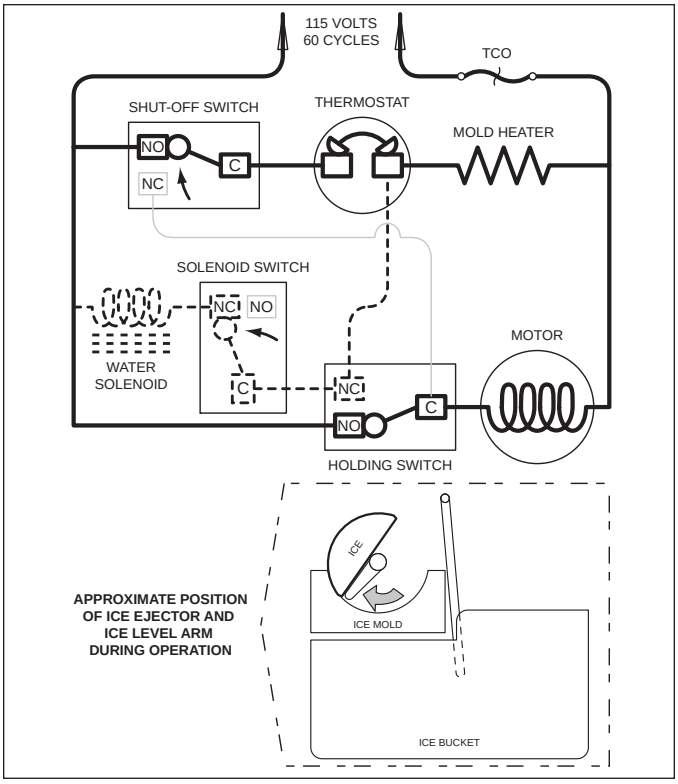

Figure 6-6. First Revolution Continued

End of First Revolution **(See Figure 6-7)**

- The water valve solenoid switch is tripped by the timing cam back to “normally open.”
- The timing cam trips the holding switch to “normally close,” which ends the first revolution, but the thermostat is still closed, so the motor is again started.
- The mold heater remains energized through the thermostat.

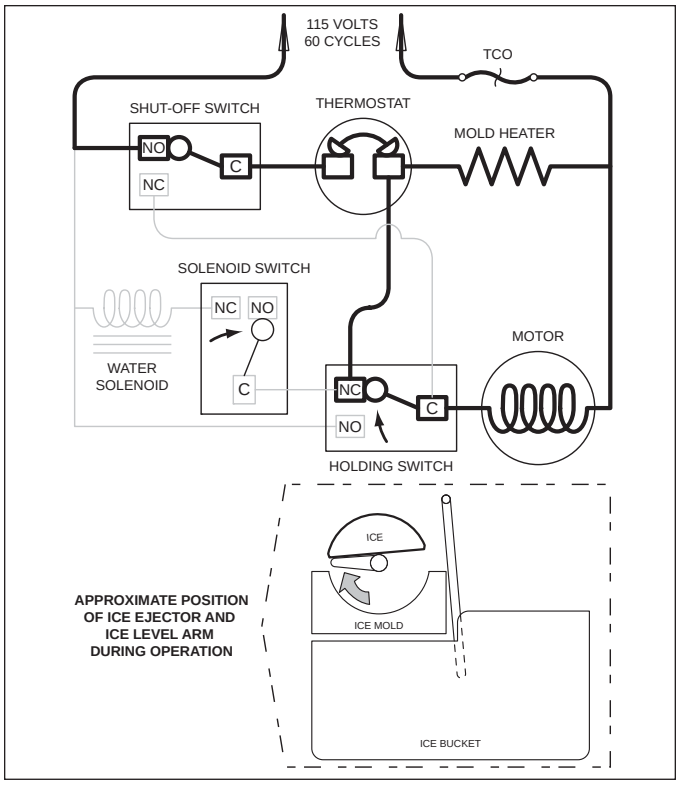

Figure 6-7. End of First Revolution

Start of Second Revolution: **(See Figure 6-8)**

- The water valve solenoid switch is tripped by the timing cam back to “normally open.”
- The timing cam trips the holding switch to “normally close,” which ends the first revolution, but the thermostat is still closed, so the motor is again started.
- The mold heater remains energized through the thermostat.

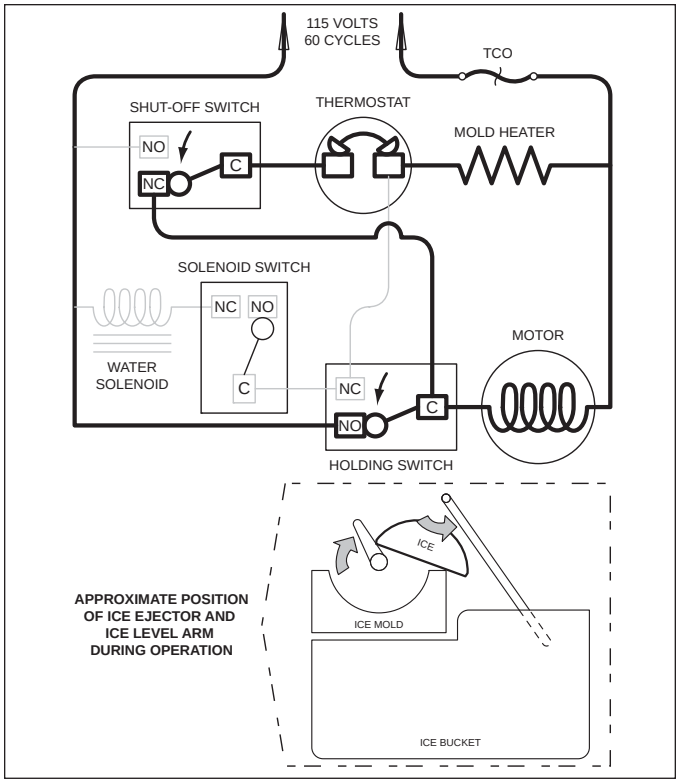

Figure 6-8. Start of Second Revolution

Second Revolution Continued **(See Figure 6-9)**

- The mold heater has warmed the thermostat, so the thermostat opens, and the mold heater is de-energized.
- If the shut-off arm comes to rest on top of the ice in the storage bin (as illustrated), so the shut-off switch will remain in the “normally closed” position.
- The motor remains energized through the holding switch.

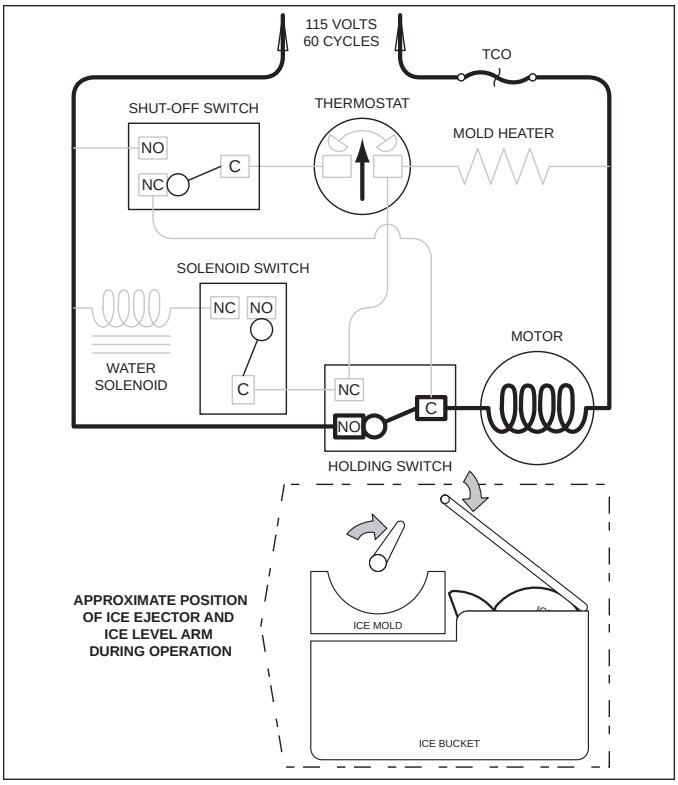

Figure 6-9. Second Revolution Continued

Second Revolution Continued **(See Figure 6-10)**

- The water valve solenoid switch is tripped by the timing cam. This time the solenoid is energized because the thermostat is open. The water solenoid is open for approximately seven seconds, filling the ice mold with water.
- the mold heater is energized through the solenoid switch and holding switch.

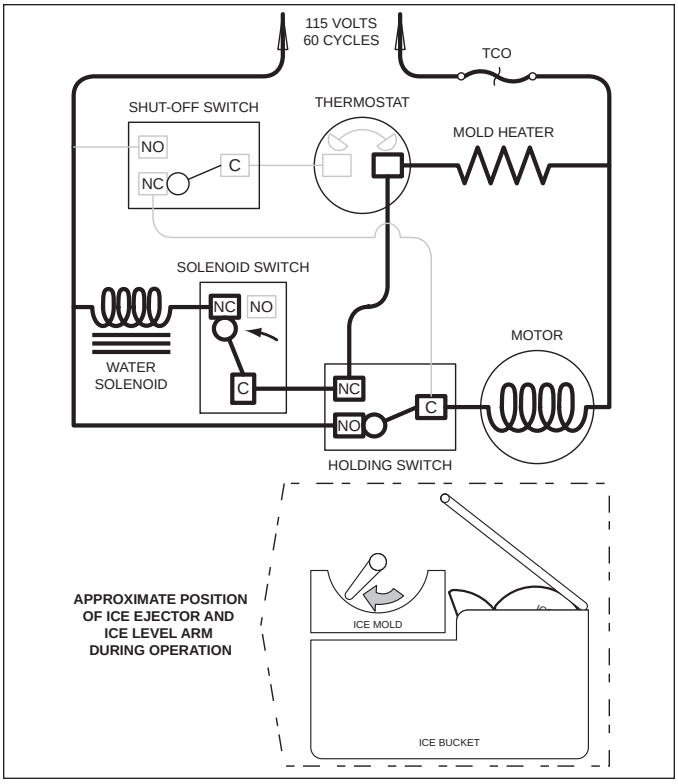

Figure 6-10. Second Revolution Continued

End of Ice making Cycle (See Figure 6-11)

- The water valve solenoid switch is tripped by the timing cam back to “normally open” ending the water fill.
- The timing cam trips the holding switch to “normally close,” which ends the second revolution.
- The thermostat is still open, so it does not start the drive motor.
- If the shut-off arm has come to rest on top of the ice in the storage bin (as illustrated), the shut-off switch remains in the “normally closed” position. This interrupts power from reaching the thermostat, until sufficient ice has been removed from the storage bin allowing the shut-off arm to lower.

NOTE: *To allow ice to freeze fully and reduce effects of low water pressure, the electronic control system disables the icemaker system for 45 minutes after each ice harvest.*

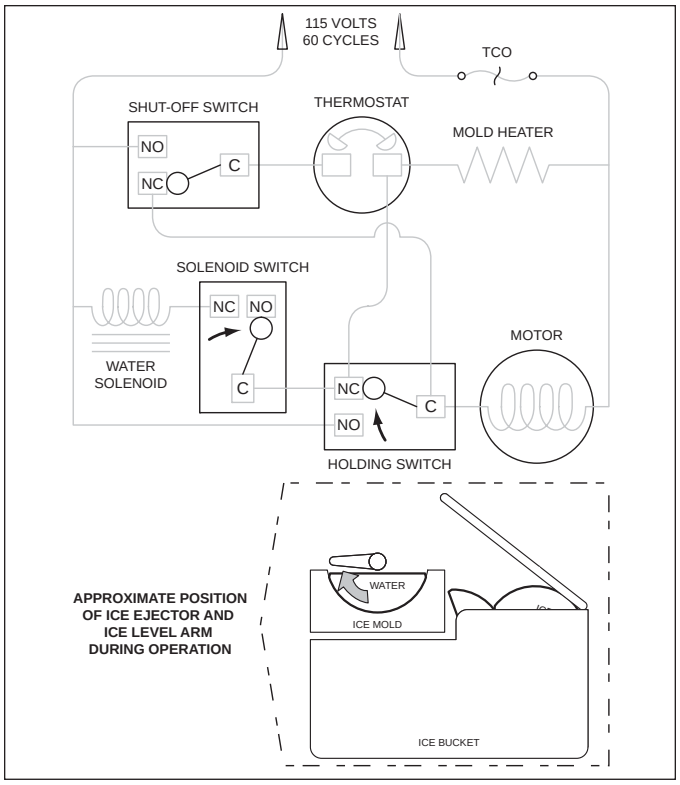

Figure 6-11. End of Ice Making Cycle

MANUALLY STOPPING ICE PRODUCTION

Ice production can be manually stopped three ways:

1. Press the ICE ON/OFF key on the control panel so that “ICE” is not displayed on the LCD.
2. Remove ice bucket so that icemaker rocker switch behind the ice bucket is not being depressed. Also, make sure no food product is coming in contact with the switch.
3. Position the ice-level/shut-off arm in the up/OFF position (See Figure 6-12).

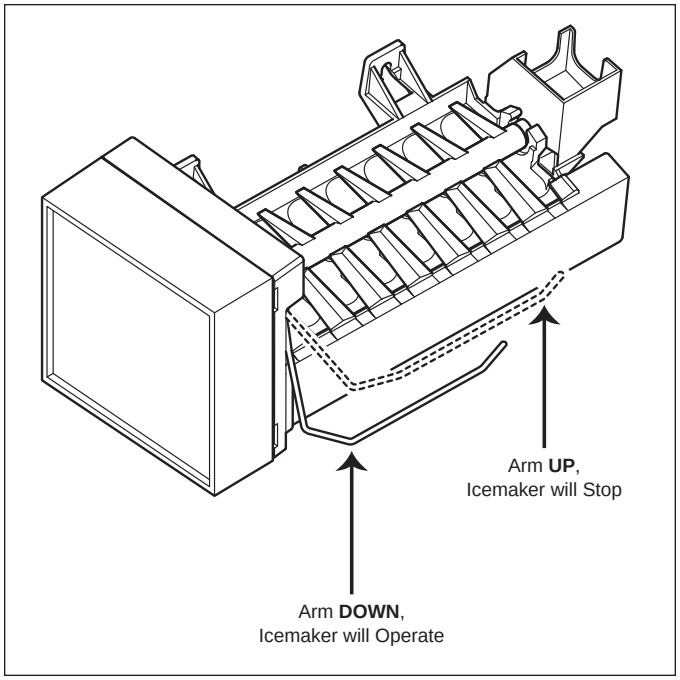

Figure 6-12. Stopping Icemaker

MANUALLY STARTING THE ICEMAKER

NOTE: *To allow ice to freeze fully and reduce effects of low water pressure, the electronic control disables the icemaker system for forty-five (45) minutes after each ice harvest. To bypass this 45 minute dwell for service purposes, press the the ICE ON/OFF key at the control panel to switch the system OFF, then again to switch it back ON.*

Manual Start Procedure:

1. Pry the icemaker front cover from the support using a flat-blade screwdriver or coin.
2. With a flat-blade screwdriver, turn the drive gear counterclockwise until the holding switch is activated, completing the circuit to the drive motor (this will be about a 1/8 turn). (See Figure 6-13) The icemaker will then complete its cycle automatically.

   NOTE: *If after 1/4 turn the icemaker is not running on its own, it may be in the 45 minute dwell period or there is an electrical or mechanical problem.*

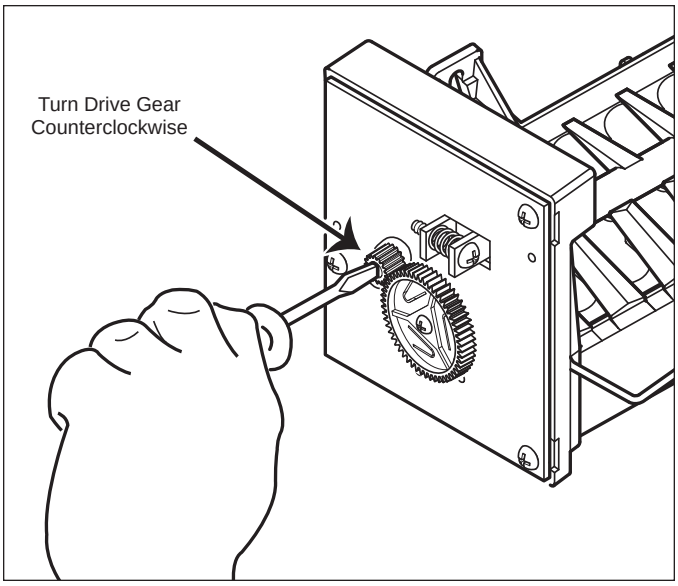

Figure 6-13. Manually Start Icemaker

ADJUSTING ICEMAKER WATER FILL LEVEL

Proper water fill level for a MidSouth icemaker is 100 - 110 cc's (3.5 - 3.75 oz). If the fill level is checked and needs to be adjusted, turn the water fill adjusting screw clockwise to reduce fill level, or counterclockwise to increase fill level. One full turn of the screw equals 15 cc's. (See Figure 6-14)

NOTE: *Always check fill level before making any adjustments of the water fill adjusting screw.*

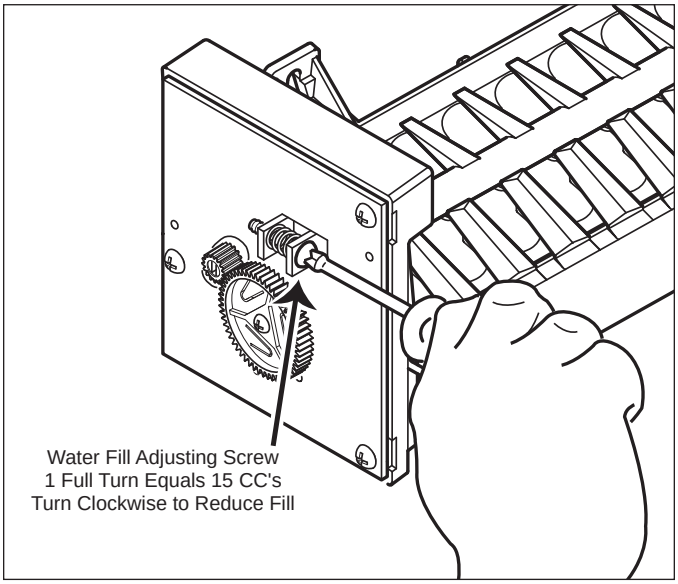

Figure 6-14. Adjust Water Fill Level

ICEMAKER FAULT TESTING

Bypass 45-minute dwell by pressing ICE ON/OFF key to OFF then ON. Then depress icemaker switch & manually start icemaker by turning driver gear counter-clockwise with screwdriver.

1 If icemaker starts & finishes cycle:
*(**NOTE:** If >15°F (-9°C), icemaker will only complete 1 revolution.)*
a. Visually inspect electrical connections at icemaker & valve. Repair if necessary.
b. Check valve operation with test cord, if doesn't open, replace.
c. Check thermostat. Open: 48°F (9°C) ± 6°, Close: 15°F (-9°C) ± 3°. Replace icemaker if defective.
d. With icemaker in park position, check solenoid switch terminals "C" & "NO" for continuity. With ejector between 8:00 & 10:00 position, check solenoid switch terminals "C" & "NC" for continuity. If no continuity for either terminal check, replace icemaker.

2. If icemaker starts but does not finish cycle:
a. With icemaker in park position check holding switch terminals "C" & "NC" for continuity. Then with icemaker ejector between 10:00 & 12:00, check holding switch terminals "C" & "NO" for continuity. If no continuity for either terminal check, replace icemaker. (Refer to enclosed wiring diagram)
b. With icemaker in park position check shut-off switch terminals "C" & "NO" for continuity. With ejector between 12:00 & 2:00 check shut-off switch terminals "C" & "NC" for continuity. If no continuity for either terminal check, replace icemaker.
c. Check mold heater for 75-85Ω. If outside range, replace icemaker.

3 If icemaker motor does NOT start:
a. Lower shutoff arm
b. Check motor operation with test cord. If motor doesn't run, replace icemaker.
c. Check power to & from icemaker switch. Reconnect or repair connection or replace icemaker as necessary.
d. Check for 115V AC from control board. If power is present check & repair connection. If no power, replace control board.

QUICK REFERENCE

- Water Fill Time - 6.3±.2 seconds
- Fill Tube Heater Ohm - 2850-3890Ω
- Mold Heater Ohm - 75-85Ω
- Water Valve Ohm - 160-165Ω
- Thermostat - Open: 48°F (9°C) ± 6°, Close: 15°F (-9°C) ± 3°.
- Water Pressure Needed - 20-120 psi constant

Possible Problems

No / Slow Ice Production
1 Ice maker system switched OFF. Switch ice system ON.
2 Shut off arm in up/OFF position. Move to ON position.
3 Freezer too warm. Check temp's & see troubleshooting guide in service manual.
4 Poor airflow over icemaker. Remove obstructions.
5 Ice cube jam. Remove ice & check water fill setting.
a. Water fill setting too low (< 6 sec's). Adjust setting.
b. Water fill setting too high (> 7 sec's). Adjust setting.
6 Water froze in inlet tube. Remove ice from tube. Check for 115VAC from control board; Fill tube heater = 2850-3890Ω.
7 Water supply not constant 20-120 psi. Instruct customer.
8 Water line to unit pinched/kinked. Repair water line.
9 Saddle valve not installed correctly to supply line. Reposition.
10 Saddle valve not fully open. Open valve fully.
11 Icemaker wire/connections loose/broken. Repair wiring.
12 Water valve wire/connections loose/broken. Repair wiring.
13 Defective water valve. Check valve (160-165Ω), Replace valve.
14 Thermostat wire/connections loose/broken. Repair wiring.
15 TCO overheat or short. Replace icemaker.
16 See Icemaker Fault Testing.

No Water Fill
1 Water supply switched OFF. Switch supply water line ON.
2 Water line to unit pinched/kinked. Repair water line.
3 Saddle valve not installed correctly to supply line. Reposition.
4 Water froze in inlet tube. Remove ice from tube. Check for 115VAC from control board; Fill tube heater = 2850-3890Ω.
5 Water valve wire/connections loose/broken. Repair wiring.
6 Defective water valve. Check valve (160-165Ω), Replace valve.

Overflows / Ice Block Forms in Bucket / Oversized Cubes
1 Icemaker not level. Level icemaker.
2 Unit not level. Level unit
3 Water supply not constant 20-120 psi. Instruct customer.
4 Water fill setting too high (> 7 sec's). Adjust setting.
5 Water fill setting too low (< 6 sec's). Adjust setting.
6 Defective water valve. Check valve (160-165Ω), Replace valve.

Ice Cubes Hollow or Small
1 Icemaker not level. Level icemaker.
2 Unit not level. Level unit
3 Water supply not constant 20-120 psi. Instruct customer.
4 Water fill setting too low (< 6 sec's). Adjust setting.
5 Too little thermalmastic on thermostat. Add thermalmastic.
6 Defective thermostat (Open: 48°F (9°C) ± 6°, Close: 15°F (-9°C) ± 3°. Replace icemaker if defective.

Too much Ice
1 Shut off arm/linkage bent/broken. Repair or replace arm/linkage.
2 If ejector blades rotate with arm in up/OFF position - Icemaker faulty. Replace icemaker.

COMPONENT ACCESS AND REMOVAL

This section explains how to adjust, access and remove components. If different models have similar procedures, they are grouped together under the appropriate heading. The models covered in the procedures are listed between brackets after the heading.

This section is arranged as follows: ***Page:***

- Exterior Cosmetic / Mechanical (All Models) 7-3
- Refrigerator Interior Cosmetic / Mechanical (All Models) 7-14
- Freezer Interior Cosmetic / Mechanical (Model 601F-3) 7-23
- Freezer Interior Cosmetic / Mechanical (Models 611-3, 611G-3, 650-3, 650G-3) 7-29
- Freezer Interior Cosmetic / Mechanical (Models 632-3, 642-3, 661-3) 7-35
- Freezer Interior Cosmetic / Mechanical (Models 685-3 / 695-3) 7-41
- Lower Compressor Area Mechanical (Models 601R-3, 601RG-3, 601F-3) 7-48
- Upper Compressor Area Mechanical (All Models Except 601's) 7-49
- Sealed System (Models 601R-3, 601RG-3, 601F-3) 7-50
- Sealed System (All Models Except 601's) 7-54

An attempt has been made to arrange these procedures in such a way as to simulate which components would need to be removed first in order to gain access to other components. When following a component removal procedure, it may be necessary to reference another component removal procedure earlier in this section.

NOTE: *Before continuing, please take note of the WARNINGS and CAUTIONS below.*

⚠ WARNING

- **IF IT IS NECESSARY TO REMOVE A UNIT FROM ITS INSTALLATION, REMEMBER THAT THE UNIT COULD TIP FORWARD WHEN PULLED FORWARD BEYOND THE ANTI-TIP COMPONENTS, RESULTING IN SERIOUS INJURY OR DEATH. PULLING A UNIT FROM ITS INSTALLATION SHOULD ONLY BE PERFORMED BY AN AUTHORIZED SERVICE TECHNICIAN OR INSTALLER.**
- **TO AVOID ELECTRIC SHOCK, POWER TO THE UNIT MUST BE DISCONNECTED WHENEVER ACCESSING AND/OR REMOVING COMPONENTS POWERED BY ELECTRICITY OR COMPONENTS NEAR OTHER ELECTRICAL COMPONENTS. IF THE UNIT IS PLUGGED IN, BUT HAS NOT BEEN SWITCHED ON BY PRESSING THE UNIT ON/OFF KEY, 115 VOLTS AC IS STILL PRESENT AT THE CONTROL BOARD.**
- **IF REMOVING A DOOR OR DRAWER FROM A UNIT, REMEMBER THAT DOORS AND DRAWERS ARE HEAVY. IF THEY WERE TO FALL, THEY COULD CAUSE SERIOUS PERSONAL INJURY.**

⚠ CAUTION

- **If removing or disconnecting door closer assemblies, remember they are spring loaded and could recoil quickly when released.**
- **If working in the compressor area, remember that compressor and tubing may be hot.**
- **If working on or around an evaporator or condenser, remember that evaporator and condenser fins are sharp.**

EXTERIOR COSMETIC / MECHANICAL (ALL MODELS)

Bottom Mount Standard Louvered Grille (601R-3, 601RG-3, 601F-3)

The bottom mount standard louvered grille consists of a lower and upper grille section.

Lower Grill Section Removal - To remove lower grille section (See Figure 7-1):

1. Extract screws at bottom left and right corners of lower grille section.
2. Pull bottom of lower grille section out and up to release it from upper grille section.

Upper Grill Section Removal - To remove upper grille section (See Figure 7-1):

⚠ WARNING

UPPER GRILLE SECTION HOLDS FAN AND LIGHT SWITCHES. DISCONNECT POWER TO UNIT BEFORE REMOVING UPPER GRILLE SECTION.

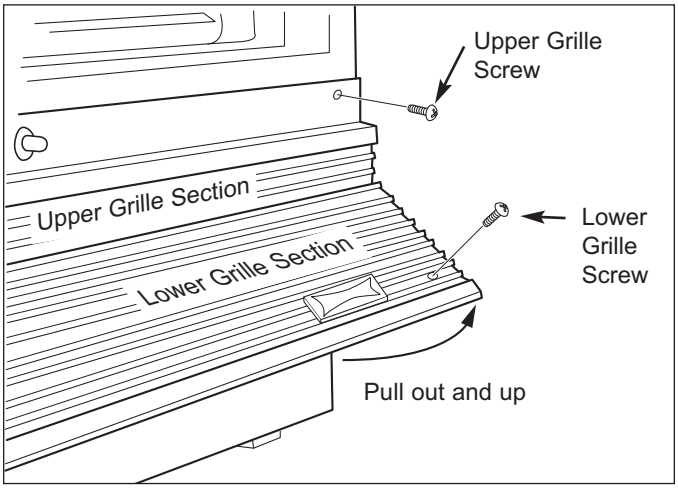

Figure 7-1. Louvered Grille

1. Remove lower grille section first.
2. Open cabinet door and extract screws at top left and right corners of upper grille section.
3. Pull upper grille section forward slightly and disconnect electrical leads from fan and light switches.

Bottom Mount Stainless Steel Grille (601R-3, 601RG-3, 601F-3)

The bottom mount stainless steel grille consists of a lower and upper grille section. The lower grill section uses a “catch and strike” retention system.

Lower Grill Section Removal - To remove lower grille section (See Figure 7-2):

1. Grasp bottom of grille and pull out and up to release strike from catch at bottom.
2. Continue to pull bottom out and up to release it from upper grille section.

Upper Grill Section Removal - To remove upper grille section (See Figure 7-2):

⚠ WARNING

UPPER GRILLE SECTION HOLDS FAN AND LIGHT SWITCHES. DISCONNECT POWER TO UNIT BEFORE REMOVING UPPER GRILLE SECTION.

1. Remove lower grille section first.
2. Open cabinet door and extract screws at top left and right corners of upper grille section.
3. Pull upper grille section forward slightly and disconnect electrical leads from fan and light switches.

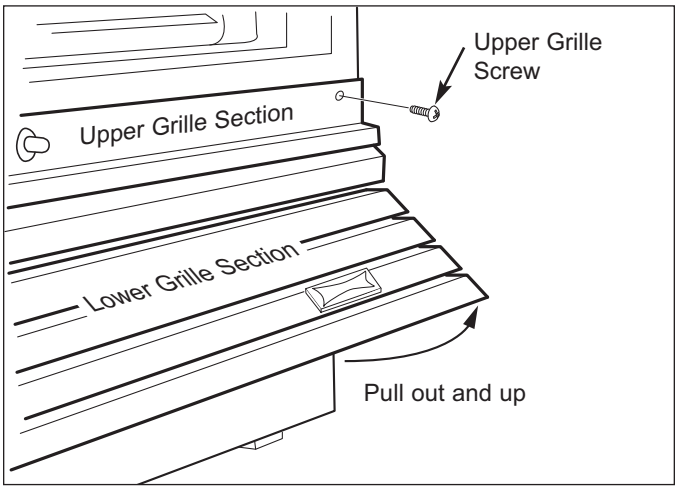

Figure 7-2. Stainless Steel Grille

Top Mount Standard & Stainless Steel Louvered Grille (All models except 601's)

To remove a top mount louvered grille assembly (See Figure 7-3):

1. Open door(s).
2. Extract grille screws which pass up through top mainframe extrusion into bottom extrusion of grille assembly.
3. Tilt top of grille forward and release grille springs from grille hooks at back side of grille, then lift grille assembly off.

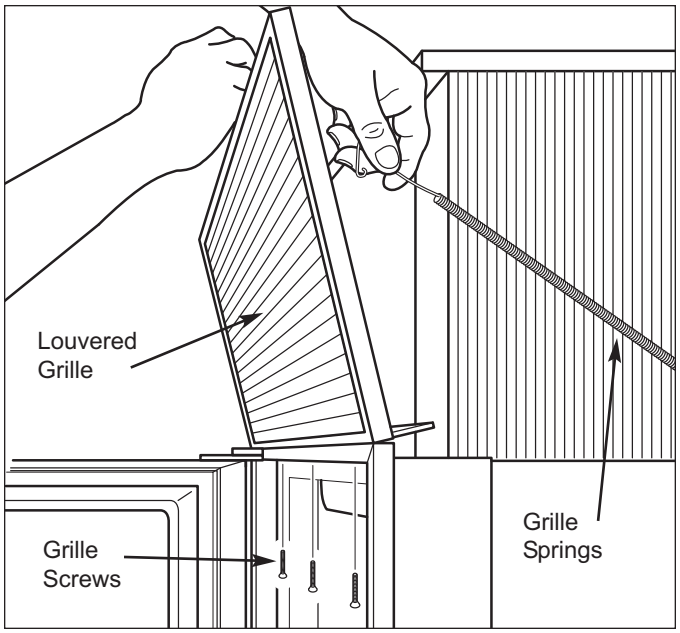

Figure 7-3. Louver Grille

Top Mount Panelized Grille Assembly (All models except 601's)

The panelized grille assembly consists of an outer and inner grille frame. The outer grille frame is attached to the unit with screws. Pegs on the back of the inner grille frame fit into keyhole slots in the outer grille frame.

Inner Grille Frame Removal **-** To remove the inner grille frame (See Figure 7-4):

1. Lift inner grille frame up.
2. Pull bottom of inner grille frame out of bottom key-hole slots.
3. Pull inner grille frame down and out of top keyhole slots.

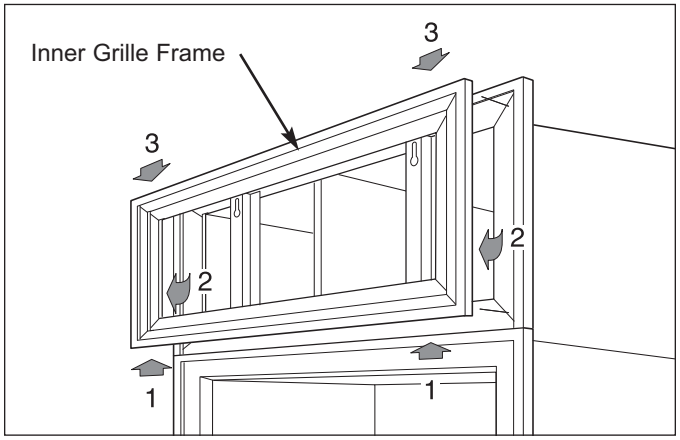

Figure 7-4. Inner Panelized Grille Frame

Outer Grille Frame Removal **-** To remove the outer grille frame (See Figure 7-5):

1. Remove inner grille frame first.
2. Open door(s).
3. Extract grille screws which pass up through top mainframe extrusion into bottom extrusion of outer grille frame.
4. Extract screws at top front of outer grille frame and lift frame off.

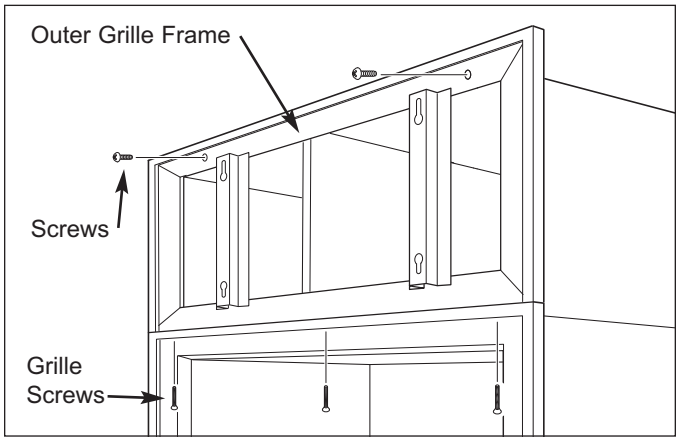

Figure 7-5. Outer Panelized Grille Frame

Kickplate (All Models)

Extract screws at bottom left and right corners of kickplate and pull kickplate forward (See Figure 7-6).

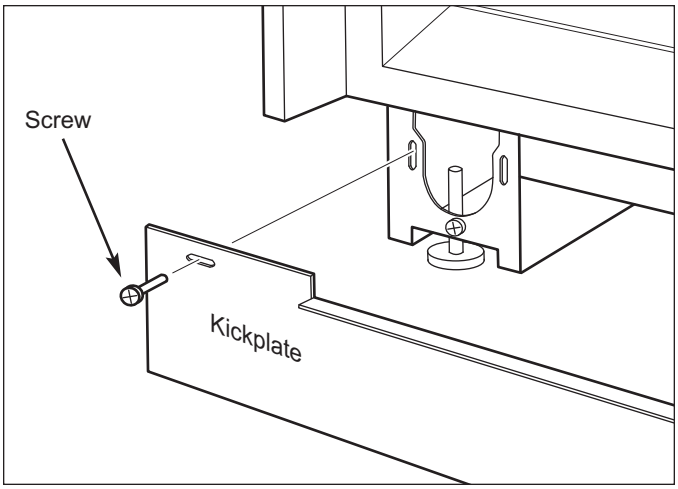

Figure 7-6. Kickplate

Drain Pan (601R-3, 601RG-3, 601F-3)

The side flanges at the top of the plastic drain pan rest on top of metal flanges behind the kickplate. Z-clamps are used to secure the drain pans top flange to the unit tray side flange.

To remove a drain pan (See Figure 7-7):

1. Remove lower grille section.
2. Remove kickplate.
3. Push drain pan up and out from underneath.

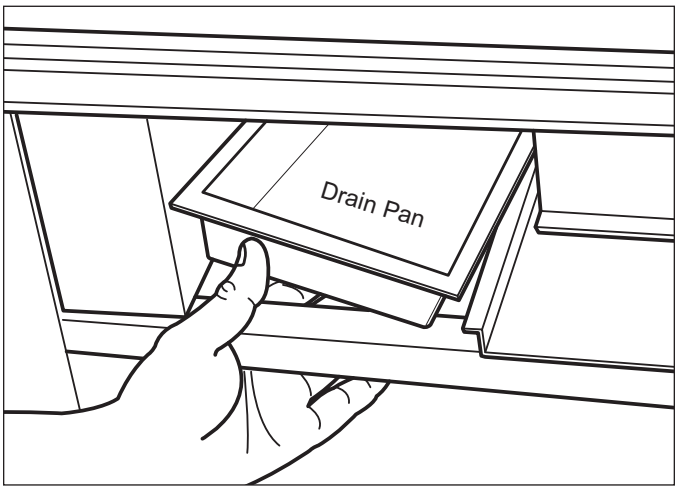

Figure 7-7. Drain Pan (601's)

Drain Pan (All models except 601's)

The drain pan slides in from the front of the unit on two side brackets, coming to rest on a rear bracket. A locking feature was built into the drain pan in the form of detentes at the bottom front that drop into notches at the front of the side brackets.

To remove a drain pan (See Figure 7-8):

1. Remove kickplate.
2. Push front of drain pan up slightly and pull forward.

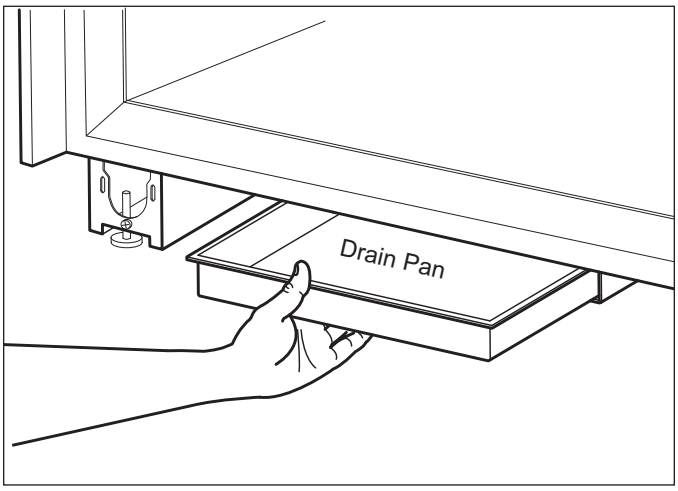

Figure 7-8. Drain Pan

Light and Fan Switch (601R-3, 601RG-3, 601F-3)

Light / fan switches are mounted in upper grille section.

To remove a switch, the lower and upper grille sections must be removed first, then (See Figure 7-9):

1. Disconnect wire leads from switch.
2. Depress tab on side of switch while pushing switch out of the opening in upper grille section.

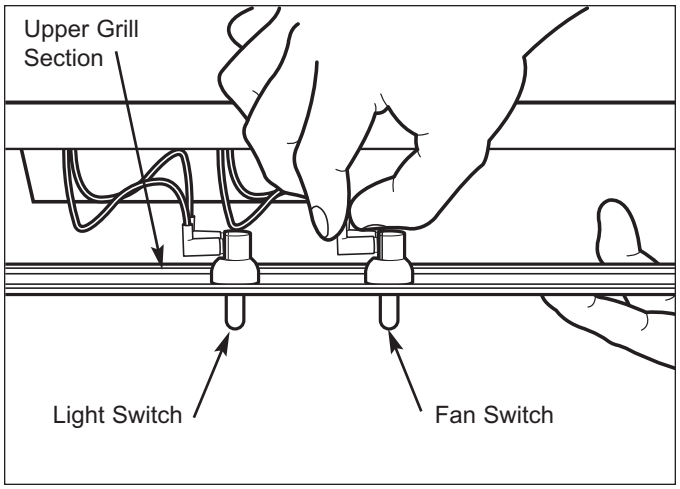

Figure 7-9. Switch (601's)

Light and Fan Switch (All models except 601's)

Light and fan switches are mounted in top mainframe.

To remove a switch, first remove the grille, then (See Figure 7-10):

1. Remove switch enclosure directly behind top mainframe extrusion.
2. Disconnect wire leads from switch.
3. Open refrigerator or freezer door below switch.
4. Depress tab on side of switch while pushing switch down, out of the opening in mainframe extrusion.

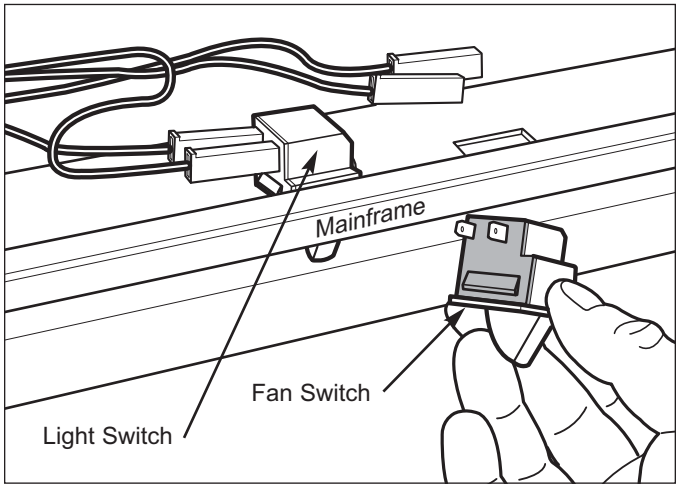

Figure 7-10. Switch

Water Valve
(611-3, 611G-3, 632-3, 642-3, 650-3, 650G-3, 661-3)

*NOTE: For **601F-3** water valve removal instructions see: "LOWER COMPRESSOR AREA MECHANICAL (Models 601R-3, 601RG-3, 601F-3)", later in this section.*

NOTES:

- *For **685-3** / **695-3**, dual water valve removal instructions, see below.*

The water valve is mounted to a bracket under the unit.

To remove a water valve, first remove the kickplate, then (See Figure 7-11):

1. Loosen mounting screw holding valve to bracket.
2. Lift valve until screw head aligns with large section of key-hole slot.
3. Push valve back until screw head clears bracket, then lower valve and pull forward.
4. Disconnect electrical leads from valve.
5. Disconnect water lines from valve.

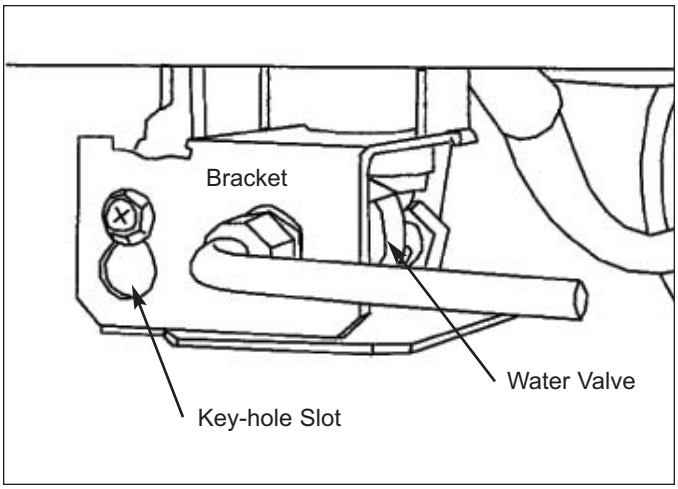

Figure 7-11. Water Valve

Dual Water Valve
(685-3 / 695-3)

The water valve is mounted to a bracket under the unit, toward the right hand side. The inlet water line uses a compression fitting. The water valve outlets are quick-connect fittings.

To remove a water valve, first remove the kickplate, then (See Figure 7-12):

1. Extract mounting screw holding valve to bracket.
2. Pull valve forward.
4. Disconnect electrical leads from valve.
5. Disconnect water lines from valve.

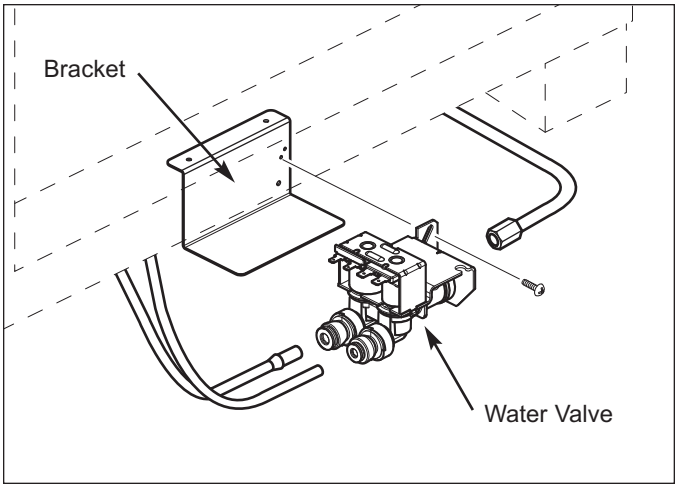

Figure 7-12. Dual Water Valve

Tubular Stainless Steel Door Handle Assembly (All Stainless Steel Models)

A screw inserted through the handle standoff into the handle secures the handle to the standoff. The standoff then slides over a threaded insert that is attached to the door shell, and a socket head set-screw inserted through the side of the standoff secures the standoff to the insert.

To remove a stainless steel handle assembly, use a 3/32" Allen-wrench to loosen the set-screw in each handle standoff and pull handle assembly off of the threaded insert. (See Figure 7-14)

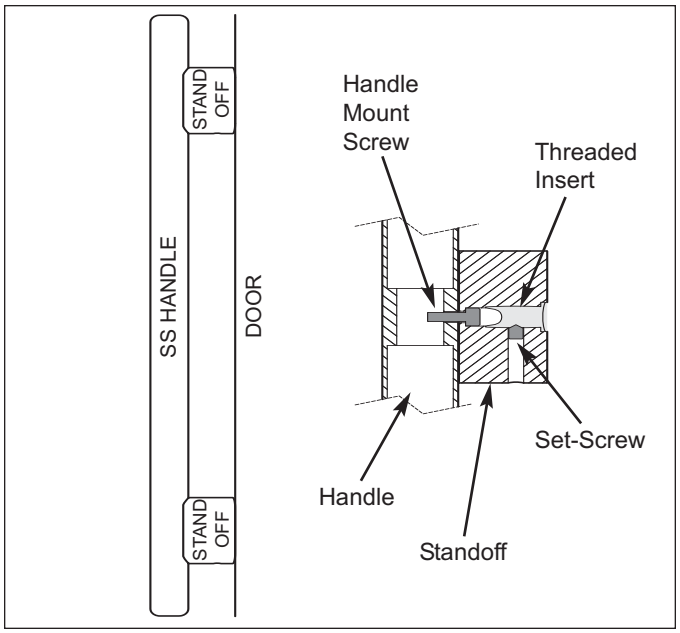

Figure 7-14. SS Handle w/Cut-Away View

Full Length Door Handle/Handle-Side Trim (All Models)

A Full length handle and/or handle-side trim is secured to the door with screws. The screw heads are then concealed by a magnetic trim strip.

To remove a full length handle or handle-side trim (See Figure 7-15):

1. Press a sticky piece of tape to center of magnetic trim strip.
2. Pull tape so that trim strip bows away from door, disengaging both ends of trim strip from the end-caps.
3. With mounting screws exposed, extract the screws, then pull handle (or handle-side trim) from door.

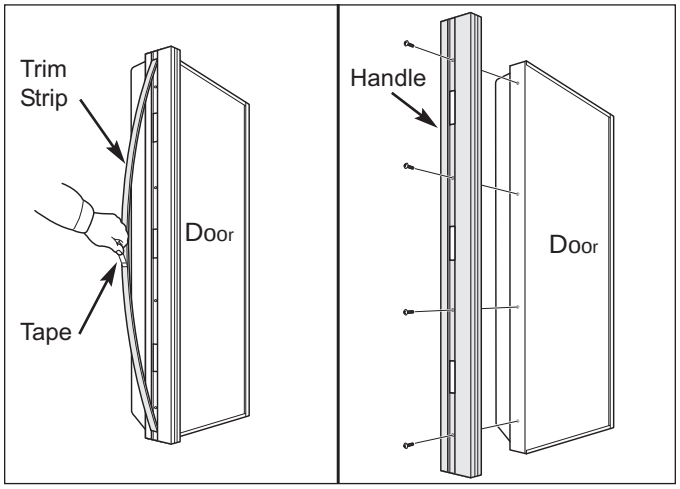

Figure 7-15. Magnetic Trim Strip / Handle

Hinge-Side Door Trim (All Models)

Hinge-side door trim is held to the door with screws.

To remove hinge-side door trim (See Figure 7-16):

1. Open Door fully.
2. Extract trim mounting screws.
3. Pull trim from door.

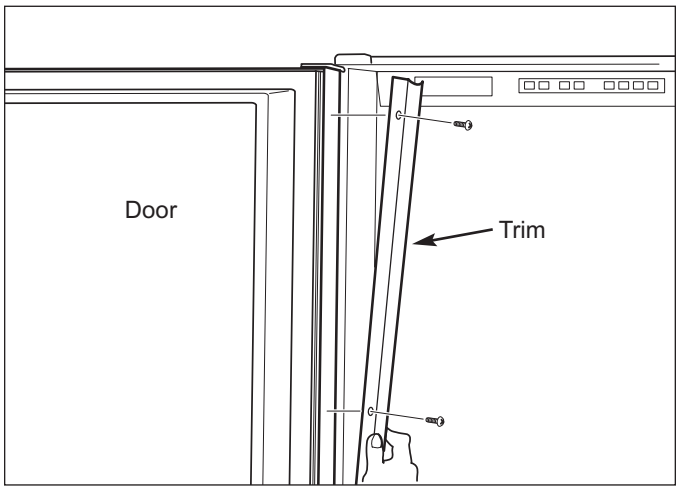

Figure 7-16. Hinge-side Trim

Dispenser Control Panel (685-3, 695-3)

The dispenser control panel is held in place over the bezel and in front of the dispenser assembly by plastic rivets passing up through its bottom flange and into the dispenser assembly.

To remove the control panel (See Figures 7-17 and 7-18):

1. Extract plastic rivet center posts using a fingernail, putty knife, or similar device, then pull rivets out.
2. Pull panel down and disconnect ribbon cable.

   NOTE: *When reassembling, make sure blue side of ribbon cable is up when connecting to dispenser control panel, and take care not to pinch or kink ribbon cable.*

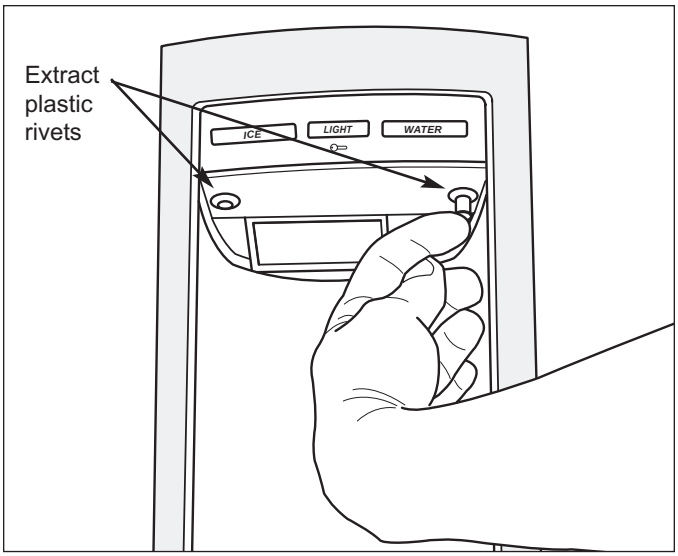

Figure 7-17. Dispenser Control Panel

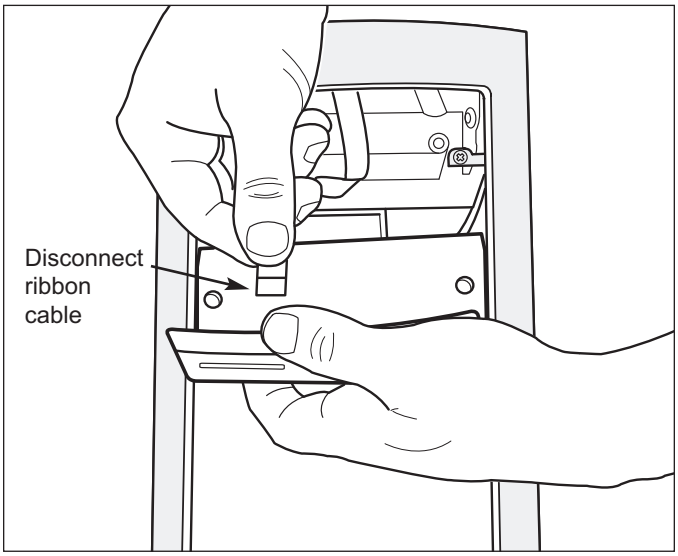

Figure 7-18. Dispenser Control Panel

Bezel (685-3, 695-3)

To remove a bezel, the control panel must be removed first, then (See Figure 7-19):

1. Lift out glasswell grille to access bottom screws.
2. Extract all screws at corners, then pull bezel forward.

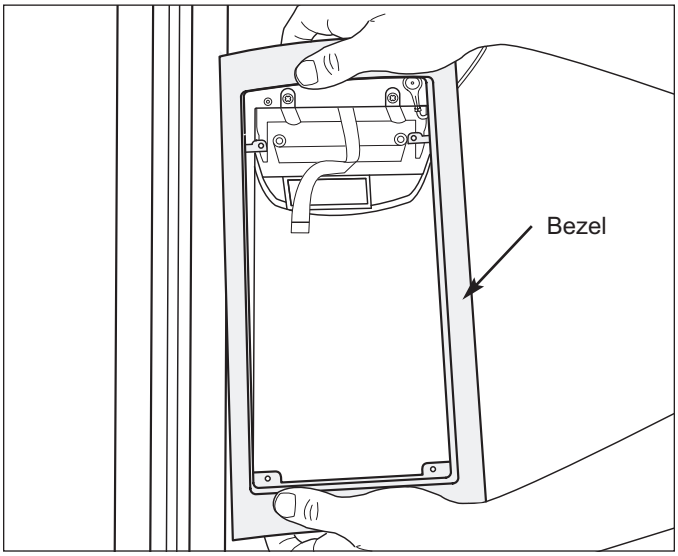

Figure 7-19. Bezel

Glasswell Liner/Sump (685-3, 695-3)

The glasswell liner sets into a groove in the sump. These two components are then installed as an assembly, with the top of the liner fitting up into a groove at the bottom of the dispenser assembly, and two plastic rivets hold the liner to the dispenser assembly.

To remove the glasswell liner/sump assembly, the control panel and bezel must be removed first, then (See Figures 7-20 and 7-21):

1. Extract plastic rivet center posts using a fingernail, putty knife, or similar device, then pull rivets out.
2. Detach ground wire from glasswell liner at top right.
3. Pull bottom of assembly out while lifting up.

   NOTE: *When reassembling, top edge of liner must fit into the groove at bottom of dispenser assembly.*

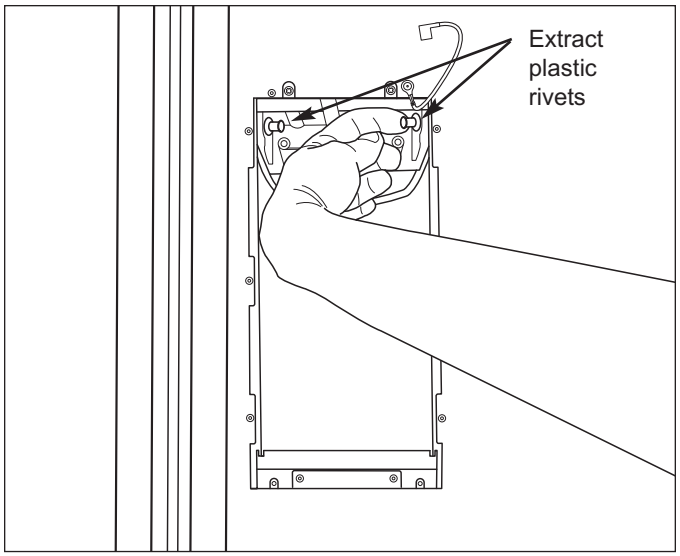

Figure 7-20. Glasswell Liner/Sump

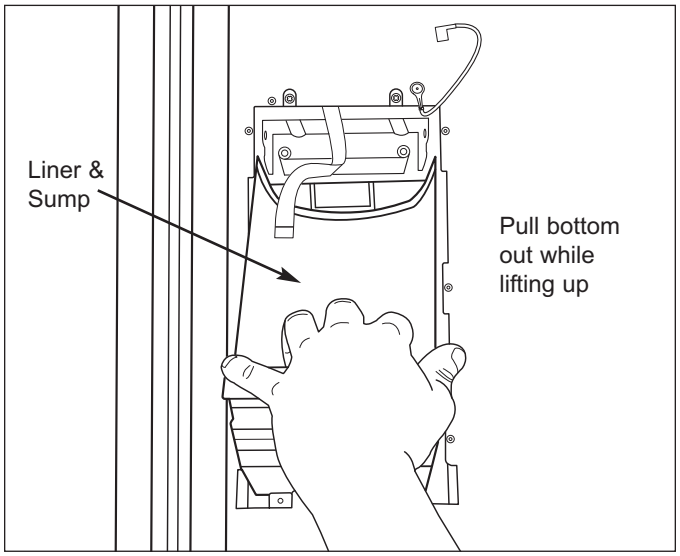

Figure 7-21. Dispenser Assembly

Dispenser Assembly (685-3, 695-3)

The dispenser assembly sits above the glasswell liner and is held in position with four screws.

To remove the dispenser assembly, the control panel, bezel and glasswell liner/sump assembly must be removed first, then (See Figures 7-22):

1. Extract front and back dispenser assembly mounting screws.
2. Pull assembly down and disconnect wires.

   NOTE: *When reassembling, take care not to pinch or kink ribbon cable, and be sure to test for proper control panel / dispenser assembly operation before leaving.*

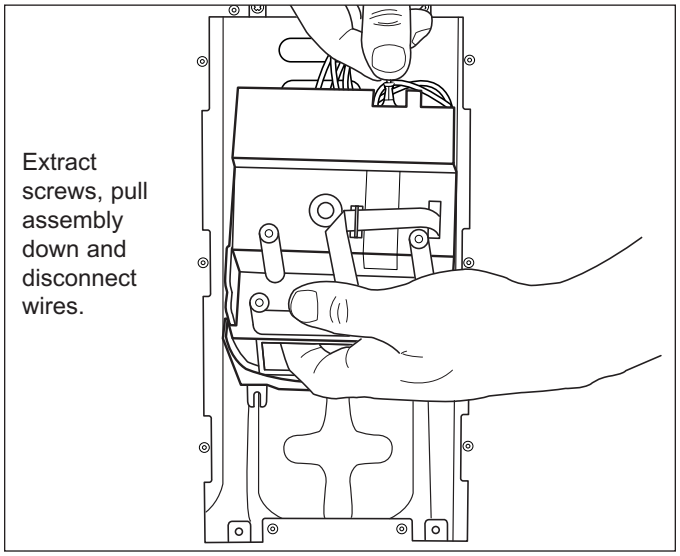

Figure 7-22. Dispenser Assembly

Door Closer Assembly
(All Models Except 611-3 & 650-3)

NOTE: *Door closer assembly removal and door closer disconnection procedures are different. If disconnecting a door closer in order to remove a door, see Door Removal instructions instead of these instructions.*

To remove a door closer assembly (See Figure 7-23):

1. With door closed, use a small straight-blade screwdriver to remove E-ring which holds door closer arm to bottom door hinge stud.
2. Pry door closer arm down off of door hinge stud.

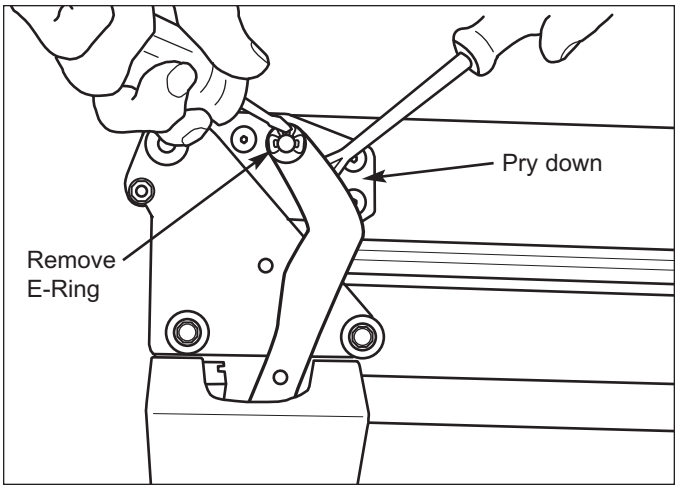

Figure 7-23. Door Closer

Door Assembly (601R-3, 601F-3, 632-3, 642-3, 611-3, 650-3, 661-3, 685-3 Fre, 695-3 Fre)

⚠ WARNING

REFRIGERATOR DOORS:

- **ON GLASS DOOR MODELS HAVE HEATER WIRES THAT PASS THROUGH TOP HINGE.**
- **ON DISPENSER MODELS HAVE DISPENSER WIRES THAT PASS THROUGH TOP HINGE.**

FAILURE TO DISCONNECT THESE WIRES DURING DOOR REMOVAL COULD CAUSE SERIOUS PERSONAL INJURY, AND/OR DAMAGE TO APPLIANCE. SEE APPROPRIATE DOOR REMOVAL PROCEDURES ON FOLLOWING PAGE.

To remove a door, the door closer assembly must be disconnected fist (excluding 611-3 and 650-3).

Door Closer Disconnection - To disconnect a door closer (See Figure 7-24):

1. Open door until hole in bottom cabinet hinge aligns with hole in door closer arm.
2. Insert short screwdriver up into the two holes.

   NOTE: *This screwdriver will be used to pry the door closer arm back onto the door hinge stud.*
3. Use a small straight-blade screwdriver to remove E-ring which holds door closer arm to bottom door hinge stud.
4. Pry door closer arm down off of door hinge stud.

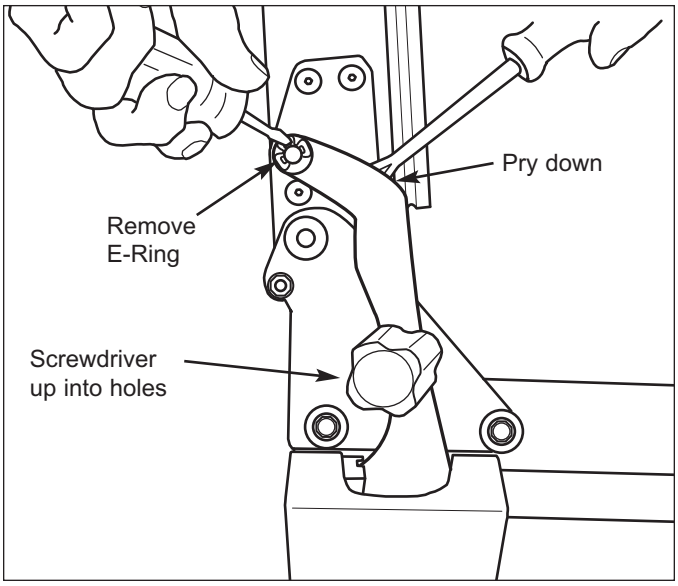

Figure 7-24. Door Closer Disconnect

Door Removal - To remove a door (See Figure 7-25):

1. Remove hinge-side door trim, if applicable.
2. With a 1/8" Allen-wrench and Phillips screwdriver, extract all screws from top door hinge.
3. Lean door away from unit and lift off of bottom cabinet hinge.

   NOTE: *When reinstalling door, use screwdriver in cabinet hinge hole and door closer arm hole to pry door closer arm back onto the door hinge stud.*

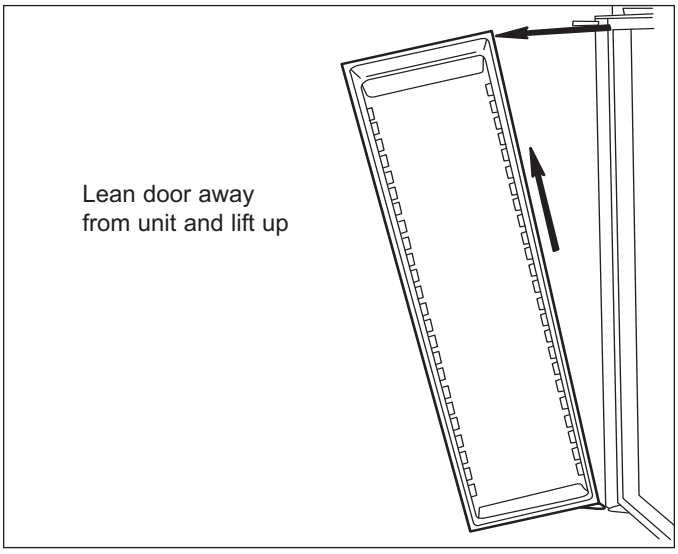

Figure 7-25. Door

Door Assembly (601RG-3, 611G-3, 650G-3, 685-3 Refrigerator, 695-3 Refrigerator)

⚠ WARNING

REFRIGERATOR DOORS:

- **ON GLASS DOOR MODELS HAVE HEATER WIRES THAT PASS THROUGH TOP HINGE.**
- **ON DISPENSER MODELS HAVE DISPENSER WIRES THAT PASS THROUGH TOP HINGE.**

FAILURE TO DISCONNECT THESE WIRES DURING DOOR REMOVAL COULD CAUSE SERIOUS PERSONAL INJURY, AND/OR DAMAGE TO THE APPLIANCE.

To remove a door, the door closer assembly must be disconnected fist (excluding 611G-3 and 650G-3).

Door Closer Disconnection - To disconnect a door closer (See Figure 7-26):

1. Open door until hole in bottom cabinet hinge aligns with hole in door closer arm.
2. Insert short screwdriver up into the two holes.

   NOTE: *This screwdriver will be used to pry the door closer arm back onto the door hinge stud.*
3. Use a small straight-blade screwdriver to remove E-ring which holds door closer arm to bottom door hinge stud.
4. Pry door closer arm down off of door hinge stud.

Door Removal - To remove a door (See Figures 7-27 and 7-28):

1. Disconnect electrical leads at top cabinet hinge.
2. Extract top cabinet hinge mounting bolts.
3. Lean door away from unit and lift off of bottom cabinet hinge.

   NOTE: *When reinstalling door, use screwdriver in cabinet hinge hole and door closer arm hole to pry door closer arm back onto the door hinge stud.*

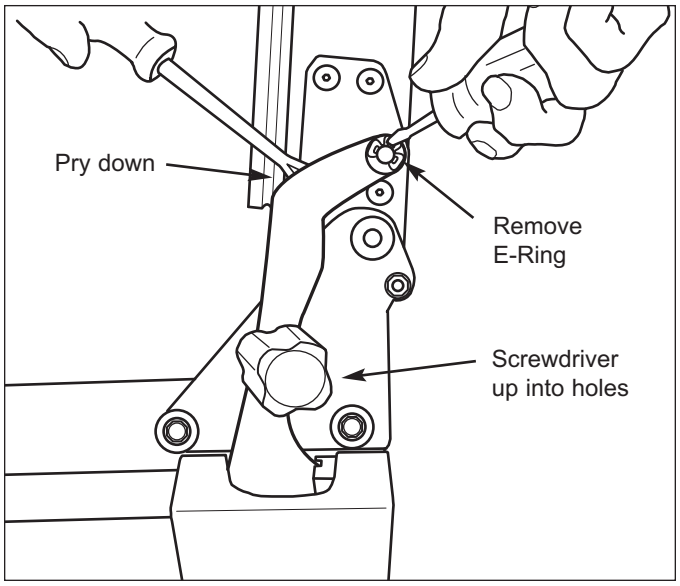

Figure 7-26. Door Closer Disconnect

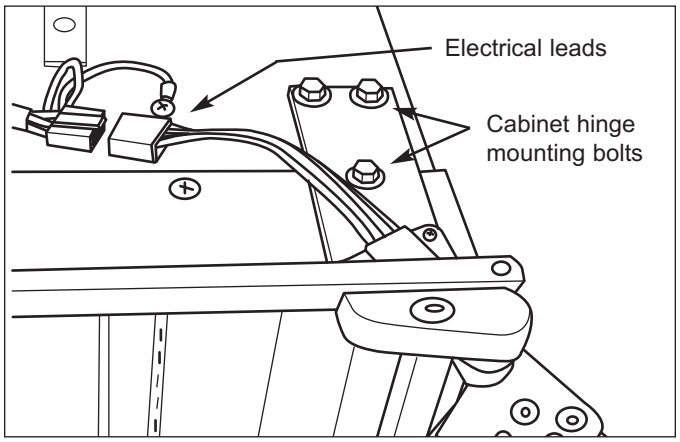

Figure 7-27. Door Electrical Leads

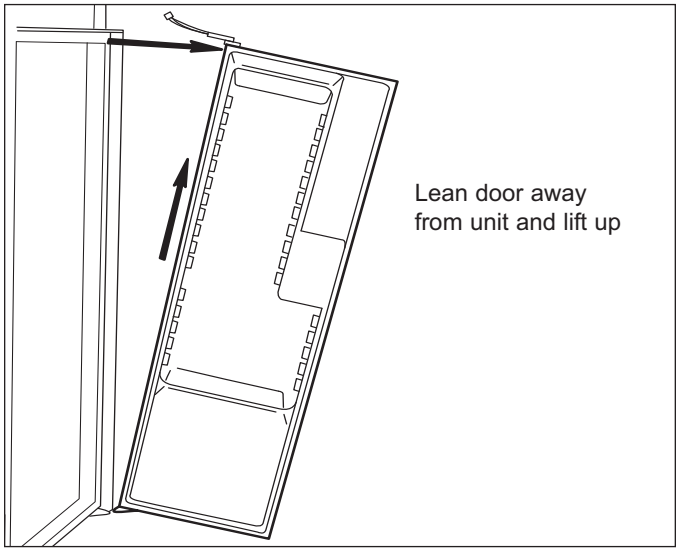

Figure 7-28. Door

Freezer Drawer Front Assembly (611-3, 611G-3, 650-3, 650G-3)

To remove a freezer drawer front assembly (See Figure 7-29):

1. Open freezer drawer fully.
2. Extract the Allen-head screws that pass through the drawer slide rail assemblies into the rear of the drawer front assembly.
3. Pull drawer front assembly from drawer slide rails.

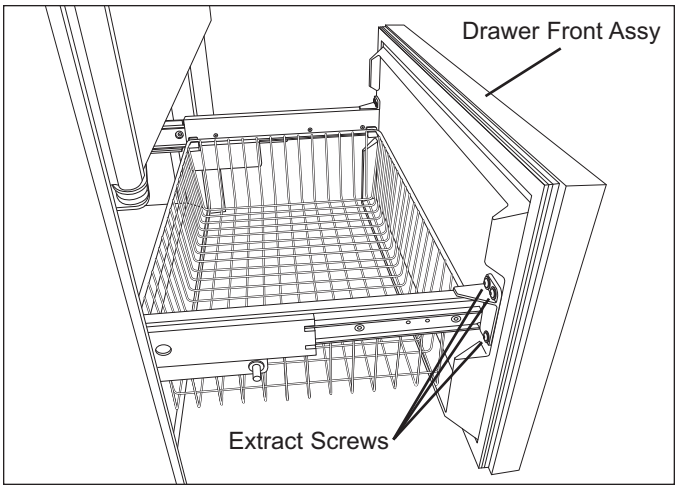

Figure 7-29. Drawer

Freezer Drawer Side Trim (611-3, 611G-3, 650-3, 650G-3)

The freezer drawer side trim slides down over trim clips that are riveted to the sides of the drawer.

To remove freezer drawer side trim (See Figure 7-30):

1. Remove Freezer drawer handle.
2. Slide side trim up off of trim clips.

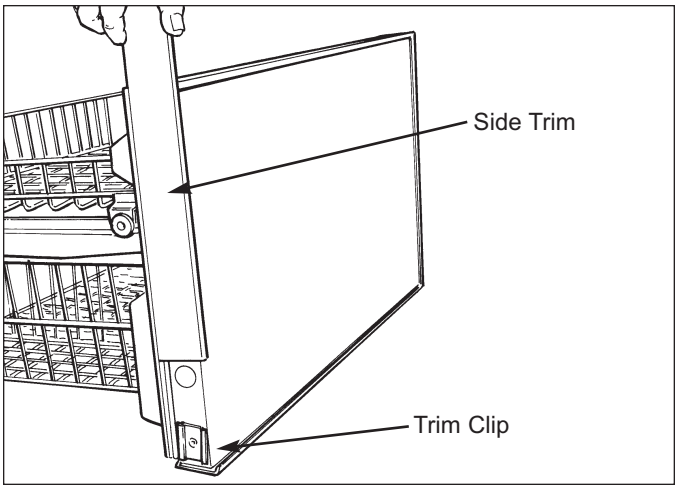

Figure 7-30. Drawer Trim

Mainframe Extrusion (All Models)

Mainframe extrusion is held to the sides of a unit with low-profile 6-lobe drive screws, and at the top with Phillips-head screws. Mainframe angles at the top corners strengthen and support mainframes at a 90° angle.

Side Mainframe Extrusion, (See Figure 7-31):

1. Pull unit from its installation approximately 4”.
2. Remove grille.
3. Remove aluminum tape from top corner.
4. Remove nut from bottom hinge stud (if applicable).
5. With a T-20 6-lobe bit, extract mounting screws.
6. With a small Phillips-head bit, extract screw at top of mainframe angle and pull extrusion from unit.

Top Mainframe Extrusion, (See Figure 7-31):

1. Pull unit from its installation approximately 4”.
2. Remove grille.
3. Remove aluminum tape from corners.
4. Remove door(s) and top cabinet hinge(s).
5. With a Phillips-head bit, extract mounting screws.
6. With small Phillips-head bit, extract screws at side of mainframe angles and pull extrusion from unit.

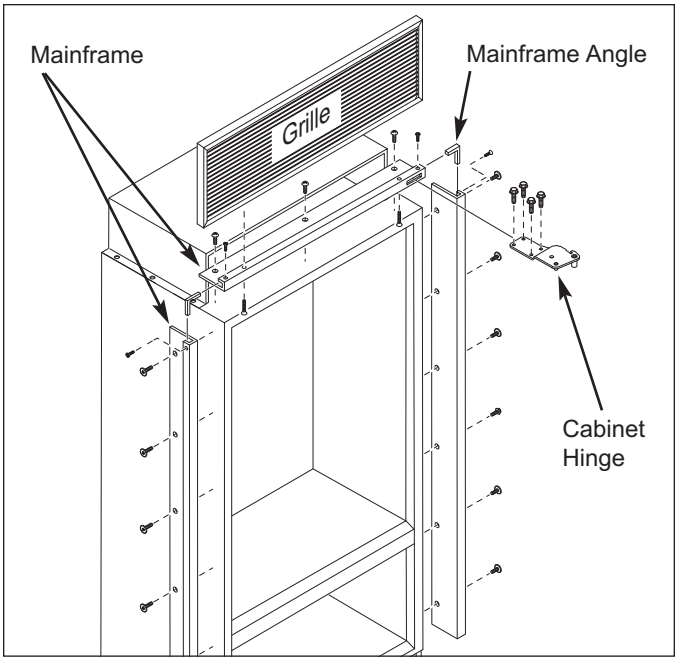

Figure 7-31. Mainframe Extrusion

REFRIGERATOR INTERIOR COSMETIC / MECHANICAL (ALL MODELS)

Door Shelf & Dairy Compartment Assembly Removal and Adjustment (All Models)

Removal and adjustment of door shelves and dairy compartment assemblies is achieved by sliding the grooves in the end caps over the molded retaining ribs of the door liner.

Lift up and out to remove, push in and down to install. (See Figure 7-32)

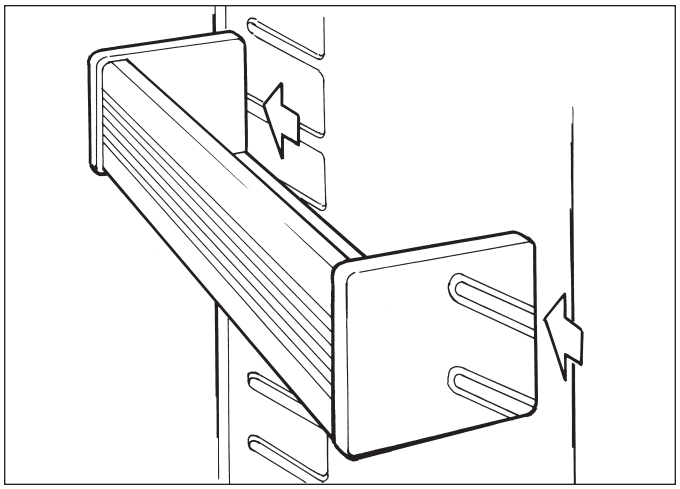

Figure 7-32. Door Shelf

Utility Basket (All Models)

Utility baskets ride on slides under one refrigerator compartment shelf.

Remove the utility basket from under the shelf assembly by pulling basket out and lifting at front (See Figure 7-33). Reverse to reinstall.

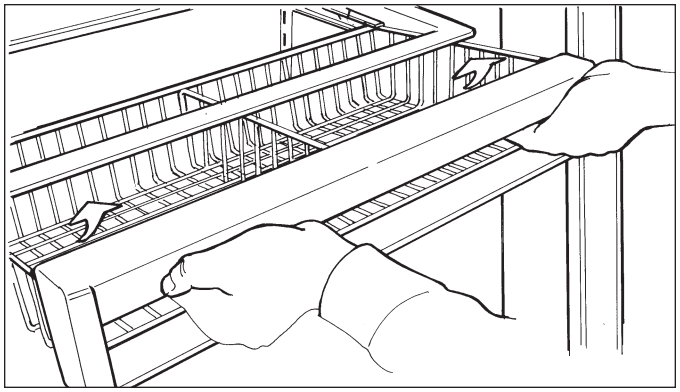

Figure 7-33. Utility Basket

Compartment Shelf Removal and Adjustment (All Models)

Remove and adjust shelf by tilting up at front while lifting the back up and out of the shelf ladders (See Figure 7-34).

To reinstall, tilt front of shelf up and align hooks at back corners with slots in shelf ladders, then insert hooks into slots and lower front of shelf.

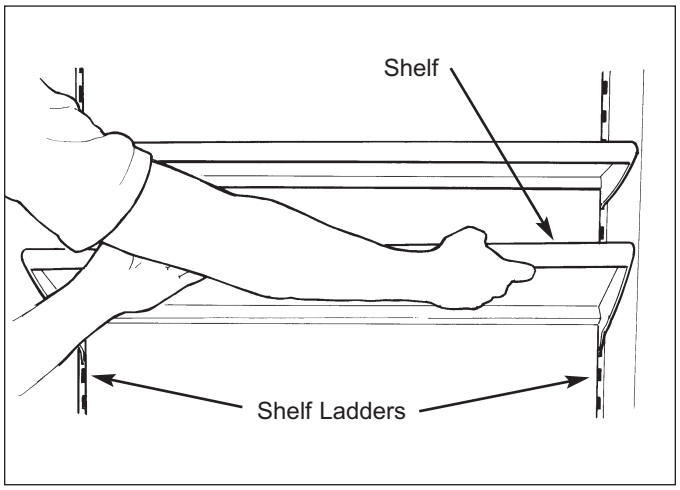

Figure 7-34. Compartment Shelf

Upper Light Diffuser (All Models)

The side frames of the light diffuser have four inverted "T" shaped slots (two each side) which slide up over pegs protruding from the side walls. For safety purposes, retaining clips by the rear slots secure the light diffuser to the rear studs.

To remove the light diffuser (See Figure 7-35):

1. Slide fingers over top of retaining clips and rotate down.
2. With clips open, lift diffuser up and slide toward rear of unit until center of "T" slots line up with the pegs.
3. Then lower light diffuser and remove from unit.

⚠ WARNING

IF BULB SHOULD SEPARATE FROM BASE, DISCONNECT POWER TO UNIT BEFORE ATTEMPTING TO REMOVE BASE.

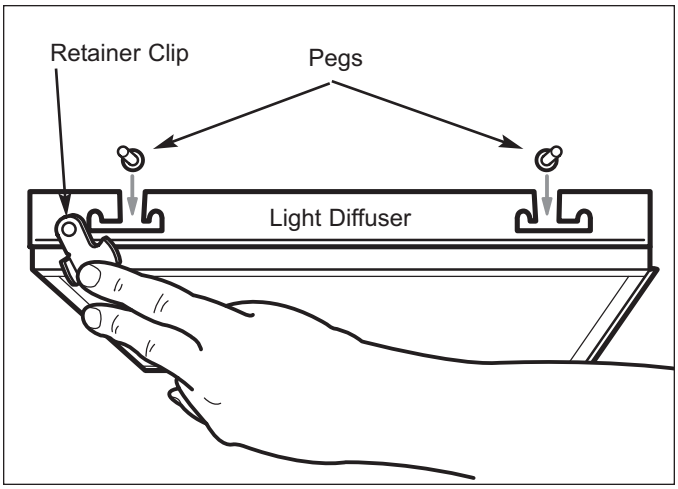

Figure 7-35. Upper Light Diffuser

Crisper Glass Shelf (All Models)

Remove crisper glass shelf assembly by opening top drawer and lifting assembly off of crisper glass supports (See Figure 7-36).

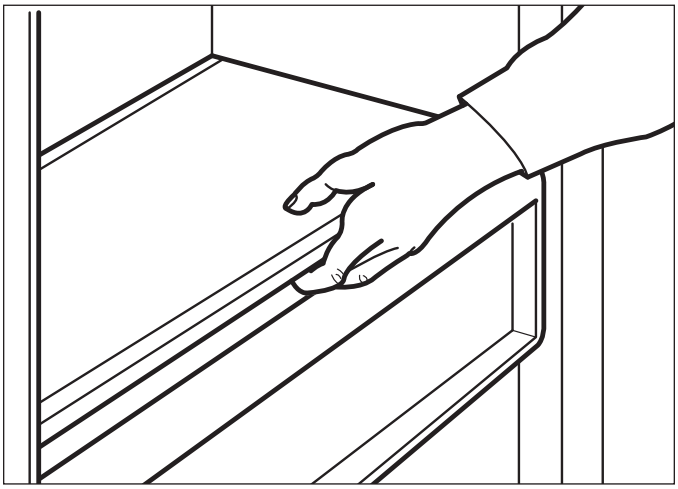

Figure 7-36. Crisper Glass

Large High Humidity Drawer (All Models)

Channels on each side of the large humidity drawer assembly rest on top of the drawer carriage assembly.

To remove the high humidity drawer assembly (See Figure 7-37):

1. Pulling drawer open until drawer stops.
2. Lift front of drawer up off of carriage assembly, then out of unit.

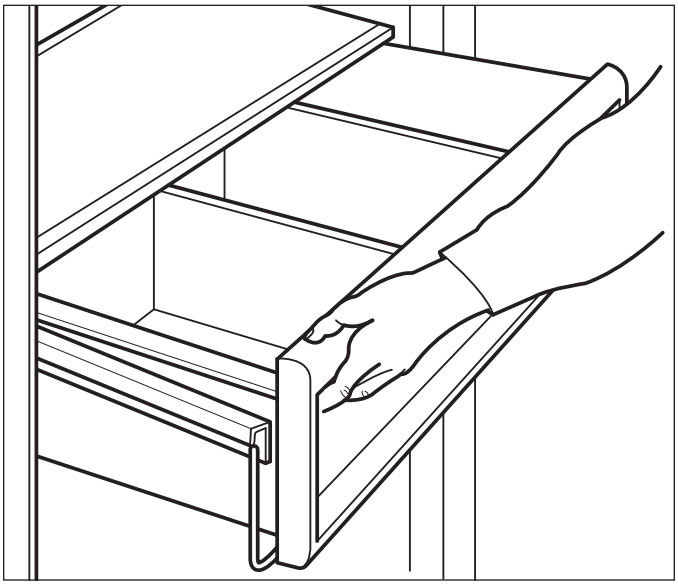

Figure 7-37. Humidity Drawer

Humidity Drawer Carriage Assembly (All Models)

Channels on each side of the carriage assembly rest on top of the two crisper slide assemblies. At the top rear and front sides of each channel are notches that fit over tabs on the crisper slide assemblies. These notches and tabs assure proper location of the carriage assembly on the slides. To hold the carriage assembly firmly in place, a small bead of silicone is applied to the top each crisper slide assembly.

To remove the humidity drawer carriage assembly (See Figure 7-38):

1. With a small flat-blade screwdriver, or similar tool, wedged between front of carriage assembly and front of crisper slide, pry carriage assembly up to break silicone seal.
2. Lift carriage assembly up at front to disengage notches from tabs at front of slide assemblies.
3. Pull carriage assembly forward to disengage notches from tabs at rear of slide assemblies.

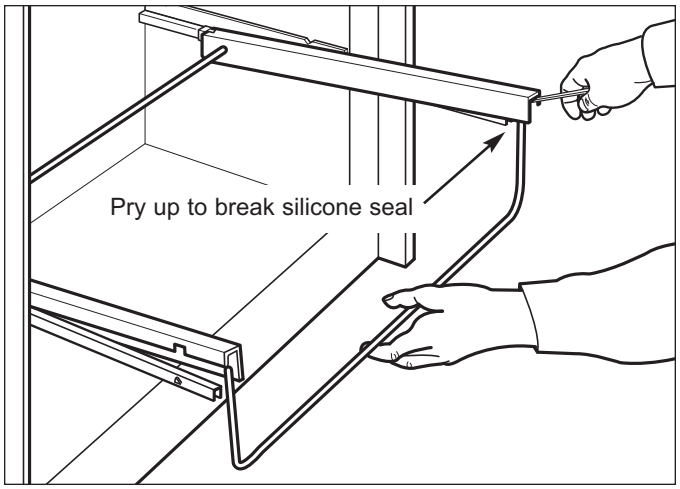

Figure 7-38. Carriage Assembly

Small Storage Drawer (632-3, 642-3, 661-3, 685-3, 695-3)

Small storage drawer assemblies ride on roller/slide assemblies.

To remove a small storage drawer assembly (See Figure 7-39):

1. Pull drawer open until it stops.
2. Lift front of drawer up.
3. Pull drawer out further to bypass stop.
4. Drop front of drawer down while lifting rear rollers out of the roller/slide assemblies.

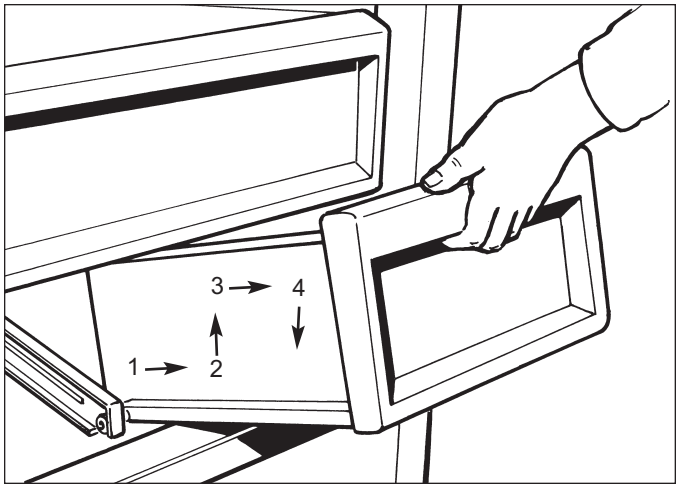

Figure 7-39. Small Storage Drawer

Control Board (All Models except 685-3, 695-3)

NOTE: *Model 685-3, 695-3 control board access and removal is covered later in this section.*

The control board is held in position by two sets of tabs behind the left side of the control panel assembly. The two forward tabs position the LCD in the control panel window, while the other two tabs secure the middle of the control board. The control board is then shielded by a control enclosure, and concealed by the light diffuser.

To remove the control board, the light diffuser must first be removed, then (See Figures 7-40 and 7-41):

1. Extract screws securing control enclosure to ceiling of compartment.
2. Lower back of enclosure while pulling it toward rear of unit.
3. Disconnect all electrical leads attached to control board.

   NOTE: *Observe orientation of membrane switch ribbon cable so it can be reconnected correctly.*
4. Expand the two tabs at middle of control board outward while pulling back of board down slightly.
5. Expand the two forward tabs outward that hold LCD in position
6. Pull control board down and toward rear of unit.

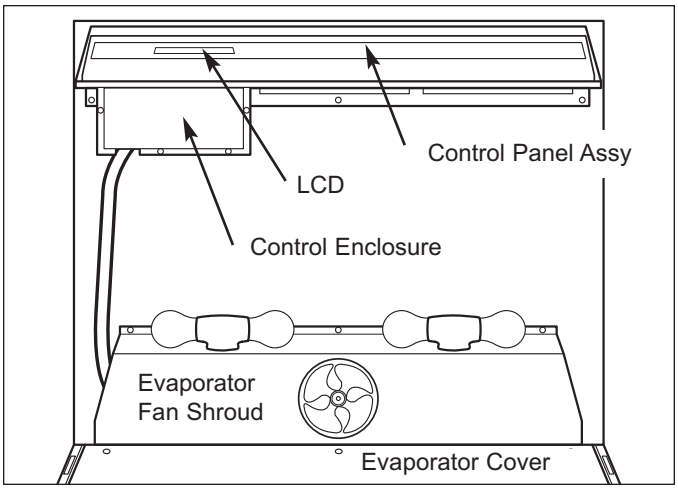

Figure 7-40. View of Compartment Top

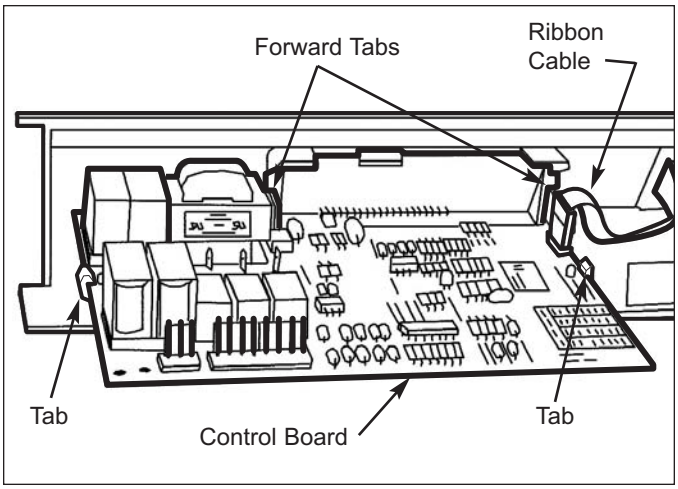

Figure 7-41. Control Board

Control Panel Assembly / Upper Front Panel Assembly (All Models)

NOTE: Model 685-3, 695-3 vertical control panel access and removal is covered later in this section.

Horizontal control panel assemblies and upper front panel assemblies are secured to the ceiling of a compartment by two rows of screws. The front row of screws (which are hidden) pass through spacers and fit into keyhole slots in the panel assembly. The back row of screws hold the assembly in place.

To remove a control panel assembly or upper front panel assembly, the light diffuser must be removed first, then (See Figure 7-42):

1. (If applicable), disconnect membrane switch ribbon cable from control board.

   NOTE: Observe orientation of membrane switch ribbon cable so it can be reconnected correctly.
2. (If applicable), disconnect control board from control panel assembly.
3. Extract back row of screws from panel assembly.
4. Push panel assembly back to line up front row of screws with keyhole slots.
5. Lower panel assembly down and pull out.

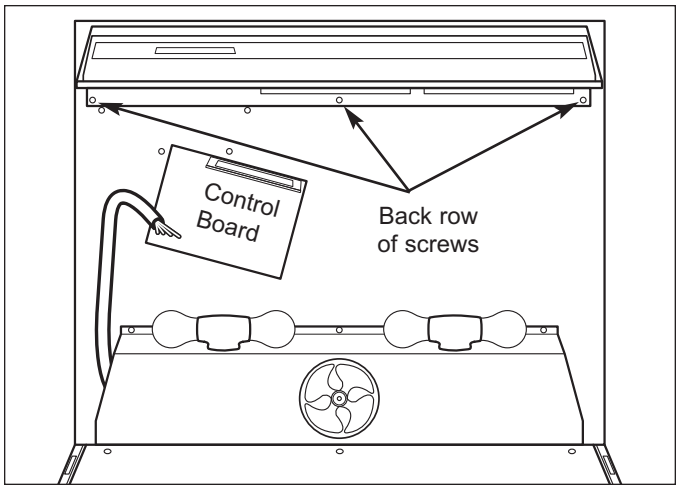

Figure 7-42. View of Compartment Top

Water Reservoir Tank Cover (685-3, 695-3)

The water reservoir is installed by sliding it back against retaining springs next to the shelf ladder. Two screws then hold it in place.

To remove the water reservoir tank cover, the light diffuser and upper front panel must be removed first, then (See Figure 7-43):

1. Extract screw at bottom rear of vertical control panel.
2. Extract screw at top center of tank cover.
3. Grasp bottom of tank cover and slide it back to depress retaining springs.
4. Swing front edge out and pull forward.

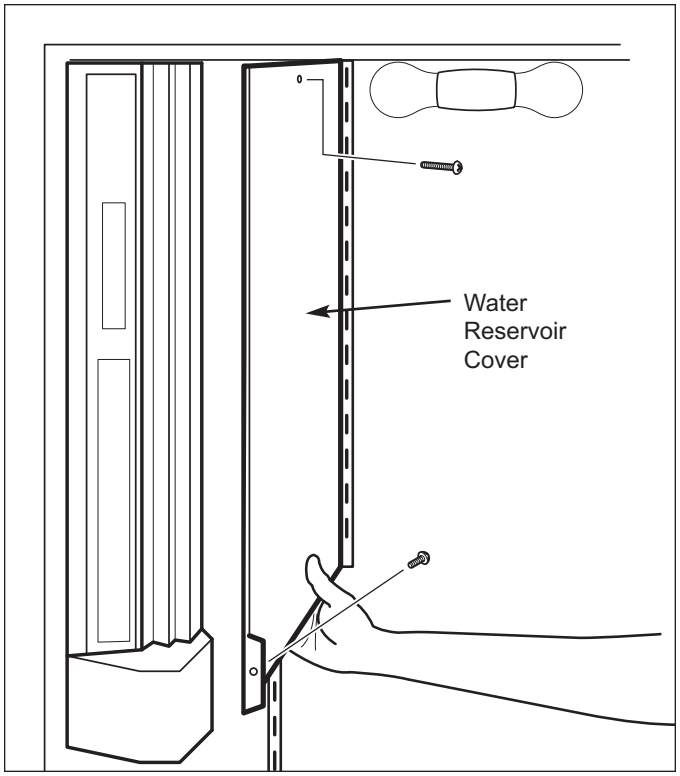

Figure 7-43. Water Reservoir Cover

Control Board Removal (685-3, 695-3)

The control board is held in position by two sets of tabs behind the control panel assembly. The two forward tabs position the LCD in the control panel window, while the other two tabs secure the middle of the control board. The control board is then shielded by a control enclosure, and concealed by the water reservoir tank cover on the mullion wall.

To remove the control board, the light diffuser, upper front panel assembly and water reservoir tank cover must first be removed, then (See Figure 7-44)

1. Extract screws securing control enclosure to wall.
2. Pull back of enclosure away from mullion wall and toward rear of unit.
3. Disconnect all electrical leads from control board.

   NOTE: *Observe orientation of membrane switch ribbon cable so it can be reconnected correctly.*
4. Expand the two tabs at middle of control board outward while pulling back of board away from wall.
5. Expand the two forward tabs outward that hold LCD in position
6. Pull control board away from wall and toward rear of unit.

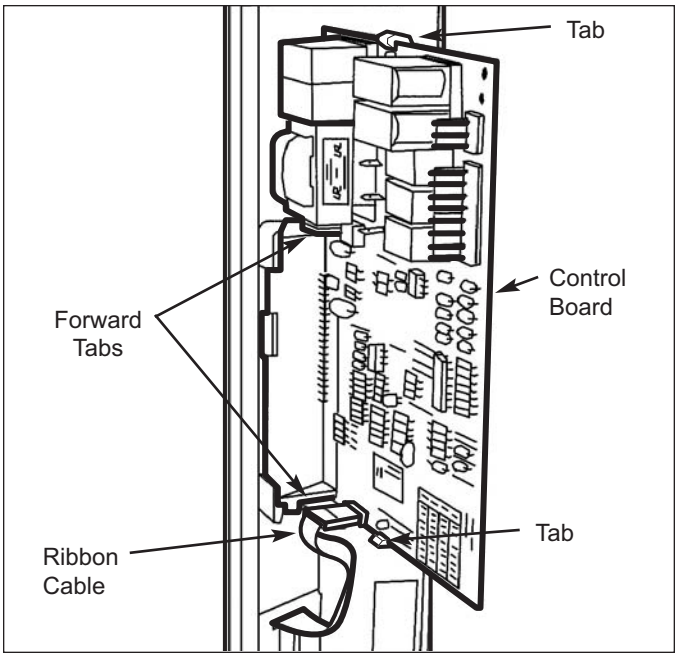

Figure 7-44. Control Board

Vertical Control Panel Assembly (685-3, 695-3)

Vertical control panel assemblies are secured to the mullion wall by screws and a sheet metal retainer.

NOTE: *It is recommended, but not necessary, to disconnect control board from control panel assembly before remove control panel assembly.*

To remove a vertical control panel assembly, the light diffuser, upper front panel and water reservoir tank cover must be removed first, then (See Figure 7-45):

1. Disconnect membrane switch ribbon cable from control board.

   NOTE: *Observe orientation of membrane switch ribbon cable so it can be reconnected correctly.*
2. Disconnect control board from control panel.
3. Extract screws at back of control panel assembly.
4. Pull panel assembly forward, from sheet metal retainer.

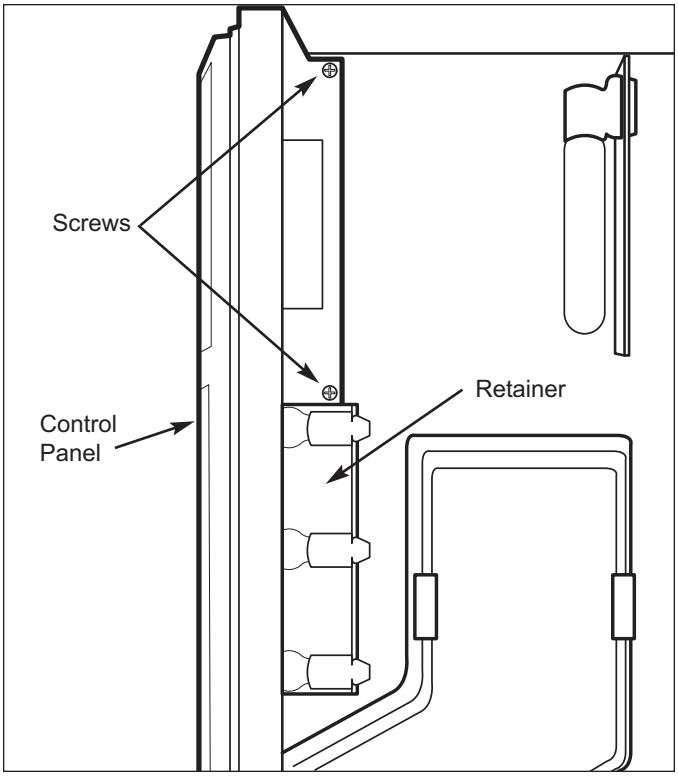

Figure 7-45. Vertical Control Panel

Water Reservoir Tank (685-3, 695-3)

The water reservoir is concealed behind the water reservoir tank cover, and is held to the mullion wall with screws fitting into spacers..

NOTE: *Before removing the water reservoir tank, turn the water supply to the unit off and drain the water from the tank.*

To remove the water reservoir tank, the light diffuser, upper front panel and water reservoir tank cover must be removed first, then (See Figure 7-46):

1. Disconnect compression fittings at inlet and outlet of water reservoir tank.
2. Remove mounting screws and lift out.

NOTE: *After reinstalling a water reservoir tank, the WATER button at the door dispenser must be depressed for approximately two minutes to refill the tank.*

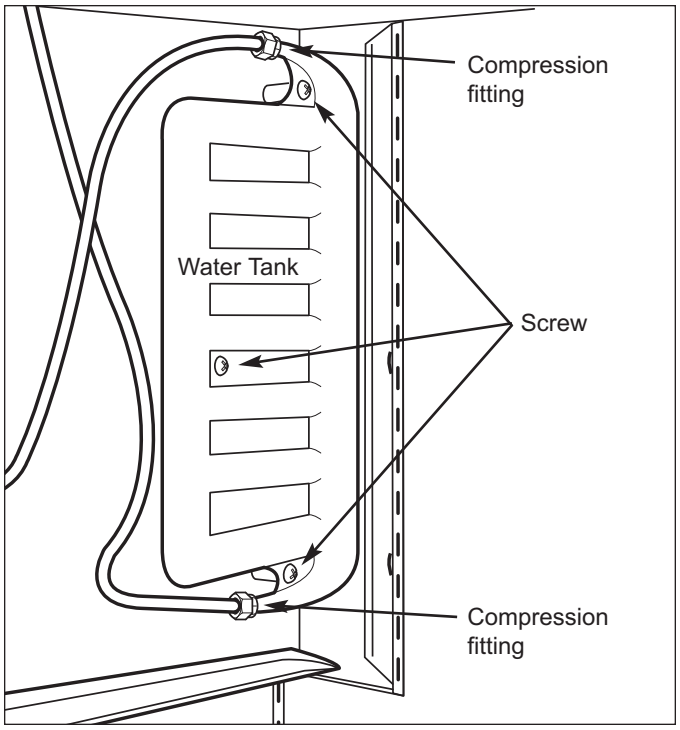

Figure 7-46. Water Reservoir Tank

Refrigerator Evaporator Cover (All Models)

The bottom of an evaporator cover is secured by slots in the side flanges fitting over pegs at the bottom of each shelf ladder. At the top, screws hold the evaporator cover to the evaporator fan shroud. On models 685-3 and 695-3, there is also a screw just below the water reservoir tank cover.

To remove an evaporator cover, the light diffuser must be removed first, then (See Figure 7-47):

1. Extract screws at top of evaporator cover.

   NOTE: *On models 685-3 and 695-3, also extract the screw just below the water reservoir tank cover.*
2. Tilt evaporator cover forward and lift off of pegs.

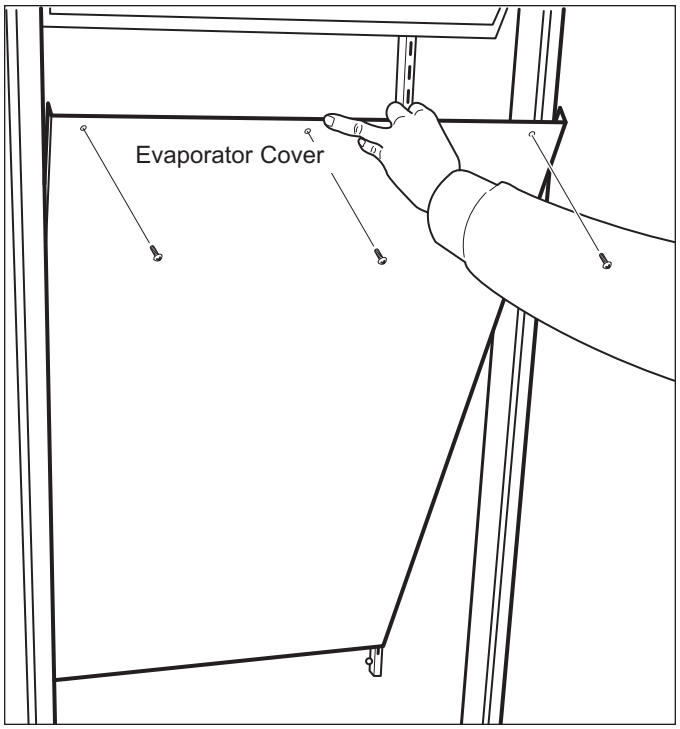

Figure 7-47. Evaporator Cover

Evaporator Fan Shroud Assembly (All Models)

Evaporator fan shroud assemblies are secured to the ceiling of the compartment with screws.

To remove an evaporator fan shroud assembly, the light diffuser and evaporator cover must be removed first, then (See Figure 7-48):

1. Extract mounting screws.
2. Lower assembly and disconnect lighting wire harness.

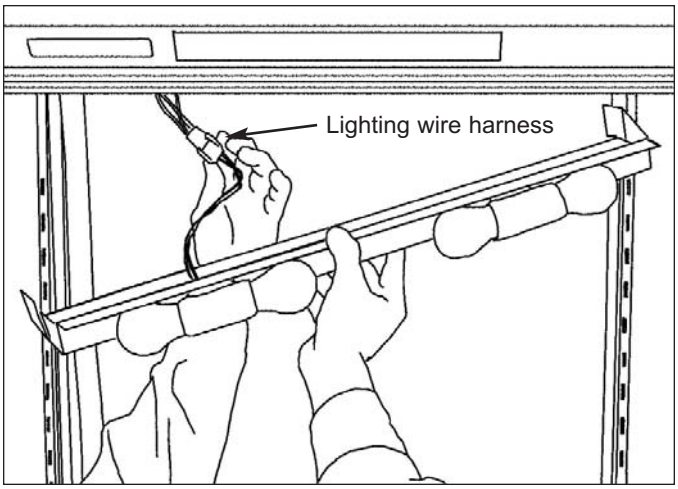

Figure 7-48. Fan Shroud

Refrigerator Evaporator Fan Assembly (All Models)

Evaporator fan assemblies are secured to the ceiling of the compartment with screws.

To remove an evaporator fan assembly, the light diffuser, evaporator cover and fan shroud must be removed first, then (See Figure 7-49):

1. Disconnect fan electrical leads.
2. Extract mounting screws and pull assembly from unit.

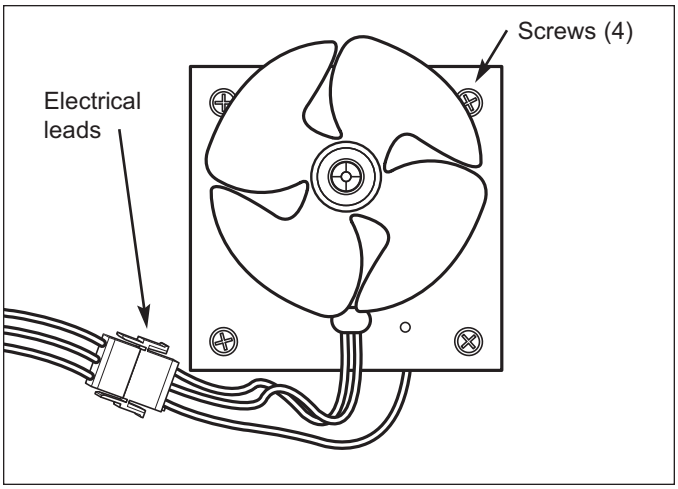

Figure 7-49. Evaporator Fan Assembly

Refrigerator Accent Light (15 Watt Light Strip) (601RG-3, 611G-3, 650G-3)

Refrigerator accent lights (a.k.a. light strips) are held in place with a light bracket at one end and grommets that fit into the light box at the other end. The light bracket and light box are secured to the ceiling with screws.

To remove a light strip, the light diffuser, evaporator cover and fan shroud must be removed first, then (See Figure 7-50):

1. Extract screws which secure light box to ceiling.
2. Disconnect light strip electrical leads.
3. Pull grommet and light strip from light box.
4. Pull light strip from light bracket.

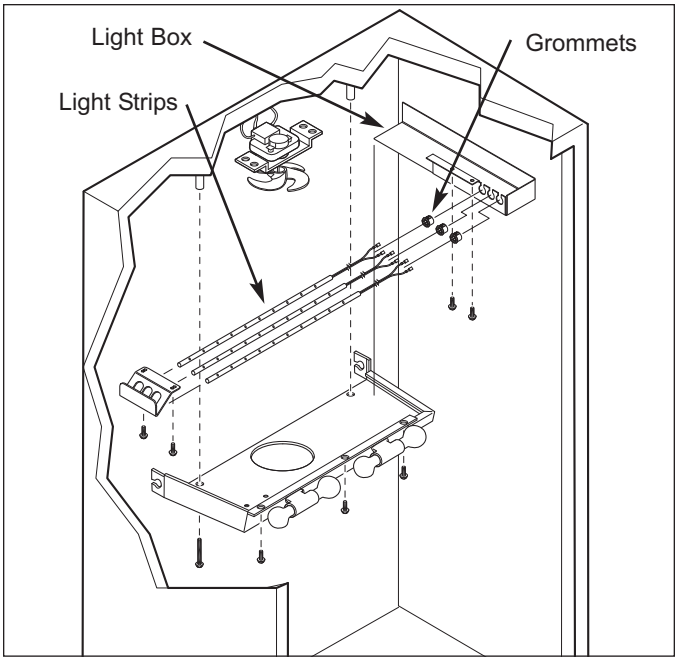

Figure 7-50. Accent Lights

Refrigerator Compartment Thermistor (All Models)

The refrigerator compartment thermistor is located behind the evaporator cover, and attached to the wall with a screw just above the evaporator.

To remove a compartment thermistor, the light diffuser and evaporator cover must be removed first, then (See Figure 7-51):

1. Disconnect thermistor electrical leads.

   NOTE: *On newer models the thermistor is hard-wired to the control board, so it will be necessary to cut the thermistor wires to remove it.*
2. Extract mounting screws an pull thermistor from unit.

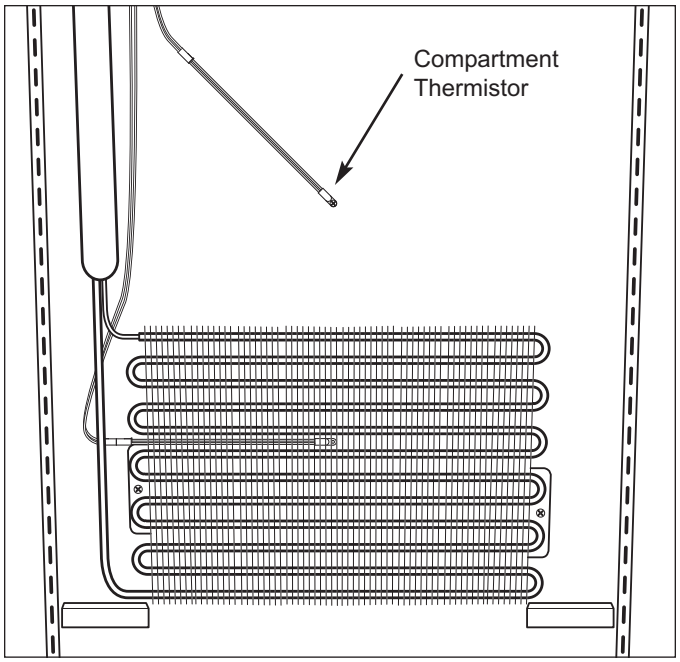

Figure 7-51. Refrigerator Compartment Thermistor

Refrigerator Evaporator Thermistor (All Models)

The refrigerator evaporator thermistor is inserted into the third opening in the evaporator fins from the top, approximately to the center of the evaporator.

To remove the refrigerator evaporator thermistor, the light diffuser and evaporator cover must be removed first, then (See Figure 7-52):

1. Disconnect thermistor electrical leads.

   NOTE: *On newer models the thermistor is hard-wired to the control board, so it will be necessary to cut the thermistor wires to remove it.*
2. Pull thermistor from evaporator fins.

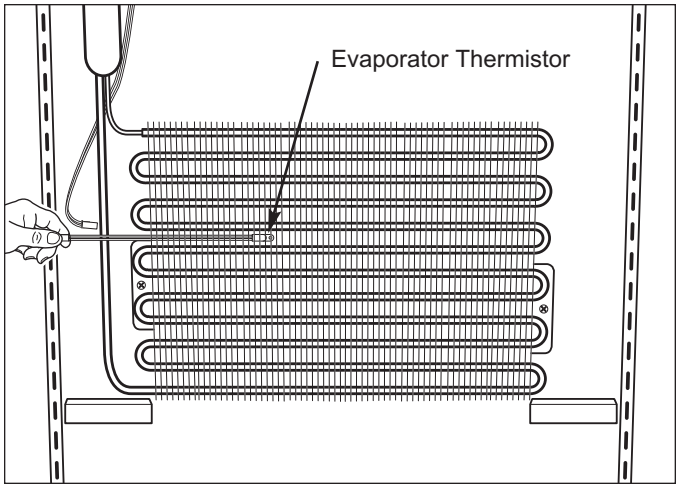

Figure 7-52. Evaporator Thermistor

FREEZER INTERIOR COSMETIC / MECHANICAL (MODEL 601F-3)

Door Shelf Assembly Removal / Adjustment (601F-3)

Removal and adjustment of door shelf assemblies is achieved by sliding the grooves in the end caps over the molded retaining ribs of the door liner.

Lift up and out to remove, push in and down to install (See Figure 7-53).

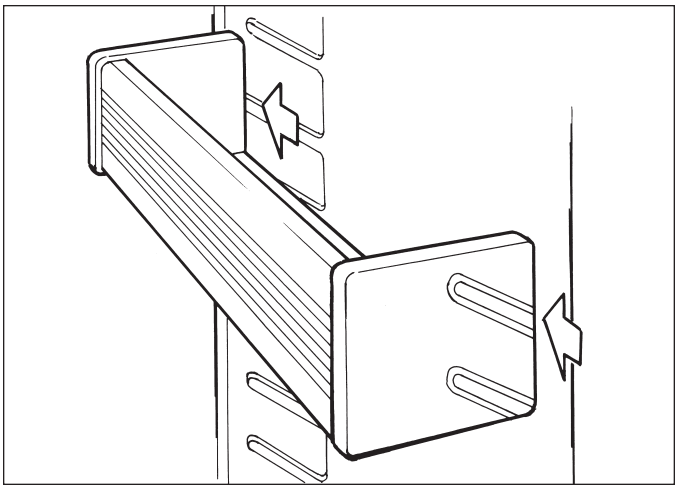

Figure 7-53. Door Shelf

Freezer Compartment Shelf Removal / Adjustment (601F-3)

Remove and adjust shelf by tilting up at front while lifting the back up and out of the shelf ladders (See Figure 7-54).

To reinstall, tilt front of shelf up and align hooks at back corners with slots in shelf ladders, then insert hooks into slots and lower front of shelf.

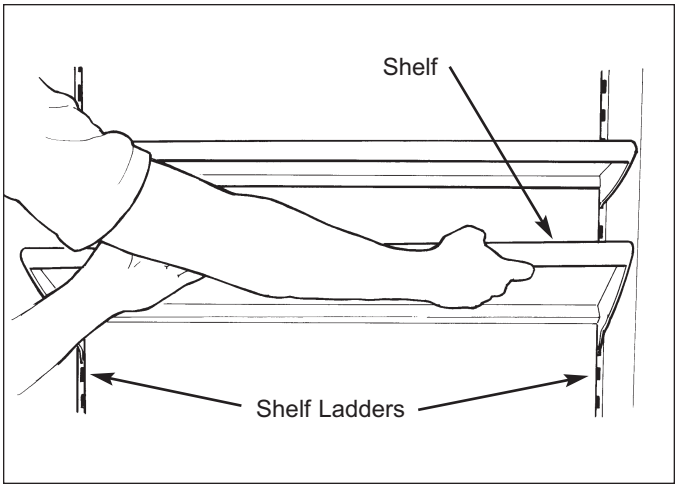

Figure 7-54. Compartment Shelf

Upper Light Diffuser (601F-3)

The side frames of the light diffuser have four inverted "T" shaped slots (two each side) which slide up over pegs protruding from the side walls. For safety purposes, retaining clips by the rear slots secure the light diffuser to the rear studs.

To remove the light diffuser (See Figure 7-55):

1. Slide fingers over retaining clips and rotate down.
2. With clips open, lift diffuser up and slide toward rear of unit until center of "T" slots line up with the pegs.
3. Then lower light diffuser and remove from unit.

⚠ WARNING

IF BULB SHOULD SEPARATE FROM BASE, DISCONNECT POWER TO UNIT BEFORE ATTEMPTING TO REMOVE BASE.

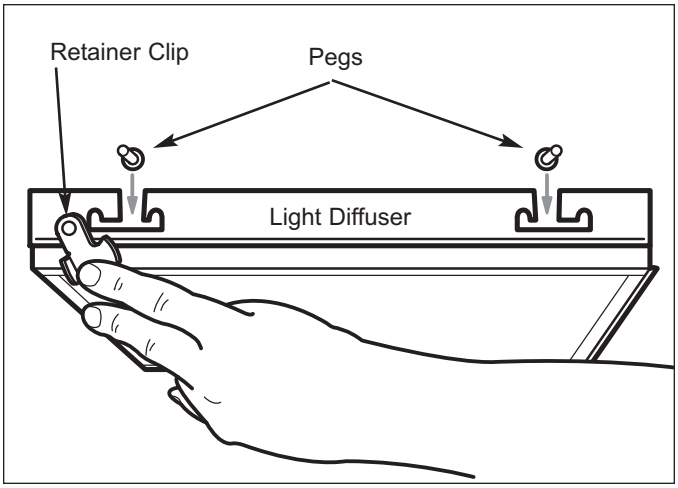

Figure 7-55. Upper Light Diffuser

Ice Bucket (601F-3)

Lift ice bucket up out of freezer basket (not shown).

Freezer Basket Assembly (601F-3)

To remove freezer basket assembly (See Figure 7-56):

1. Pull basket open until it stops.
3. Lift up at front and pull out.

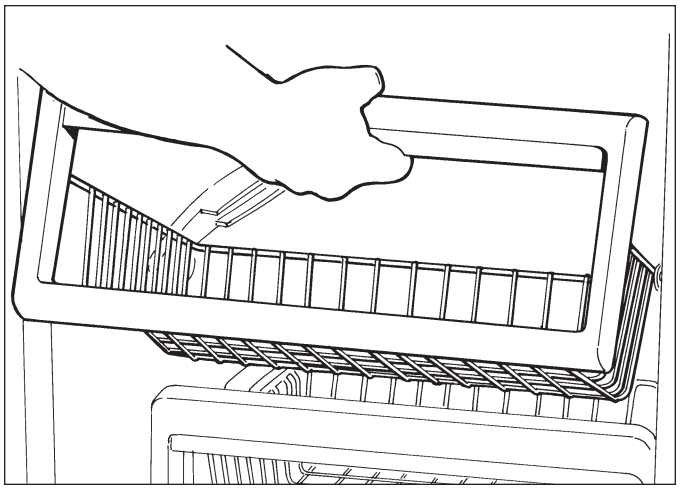

Figure 7-56. Freezer Basket

Freezer Glass Shelf (601F-3)

The glass shelf is secured to the side walls by screws that pass through the side frames.

To remove the freezer glass shelf (See Figure 7-57):

1. From underneath glass shelf, remove the two front mounting screws
2. Loosen the two rear screws.

   NOTE: *The rear screws fit into slots, so they do not need to be fully removed.*
3. Pull shelf forward slightly and lift up and out.

NOTE: *When reinstalling freezer glass shelf, make sure flange at top of freezer basket center slide support sets into the channel in freezer glass shelf front.*

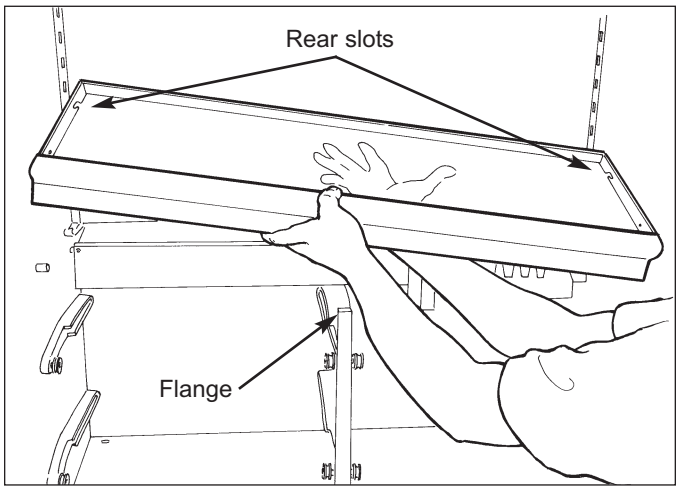

Figure 7-57. Freezer Glass Shelf

Icemaker Assembly (601F-3)

The icemaker assembly is located behind the top right freezer basket, just below the glass shelf. It is attached to the drain trough enclosure with two screws at top and one at bottom.

To remove the icemaker assembly, the top right freezer basket must first be removed, then (See Figures 7-58):

1. Disconnect ice level mechanism by sliding connecting rod to right, off of icemaker shut-off arm, allowing ice level arm to drop out of the way.
2. Extract screw at bottom left of icemaker.
3. Extract screws at top of icemaker.
4. Pull forward and disconnect electrical leads.

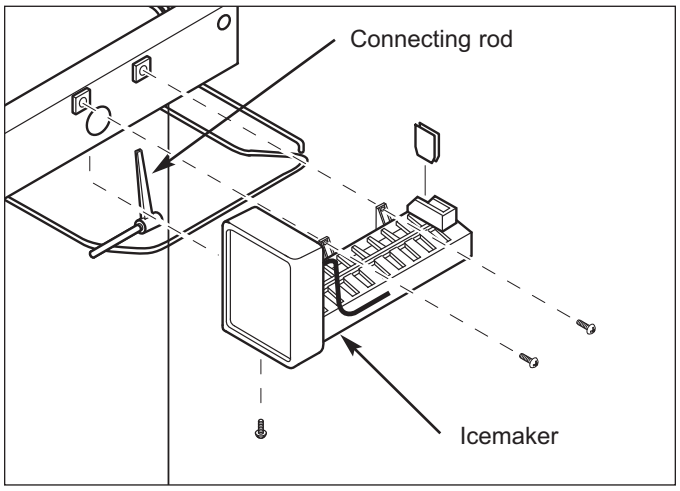

Figure 7-58. Icemaker

Drain Trough Enclosure (601F-3)

The drain trough enclosure is secured to the back wall of the compartment with screws and plastic supports, just below the freezer glass shelf.

NOTE: *It is not necessary to remove the freezer glass shelf, icemaker or compartment thermistor in order to remove the drain trough enclosure.*

To remove drain trough enclosure (See Figure 7-59):

1. Extract screws at top corners of enclosure.
2. Extract screws along bottom of enclosure.
3. Lean enclosure forward, disconnect thermistor, icemaker and icemaker switch electrical leads, then pull enclosure out.

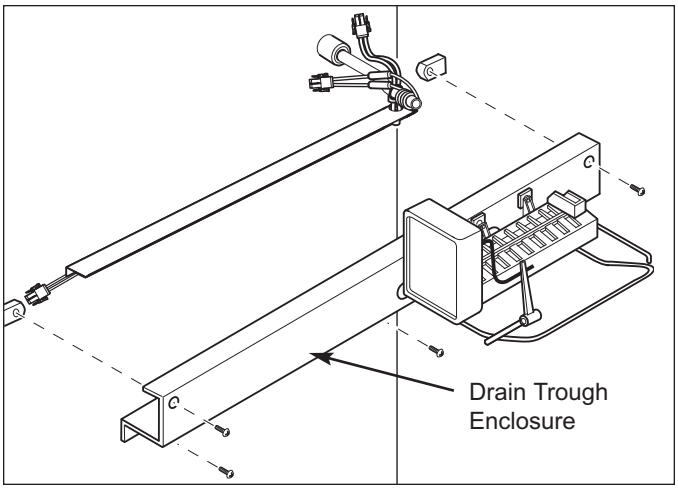

Figure 7-59. Drain Trough Enclosure

Freezer Compartment Thermistor (601F-3)

The freezer compartment thermistor is attached to the bottom center of the drain trough enclosure, just above the top center freezer basket slide. The thermistor wire leads attach to the wire harness behind the drain trough enclosure.

To remove the compartment thermistor, the drain trough enclosure must be disconnected from the back wall first, then (See Figure 7-60):

1. Disconnect thermistor from wire harness.
   NOTE: *On newer models the thermistor is hard-wired to the control board, so it will be necessary to cut the thermistor wires to remove it.*
2. Extract thermistor mounting screw.

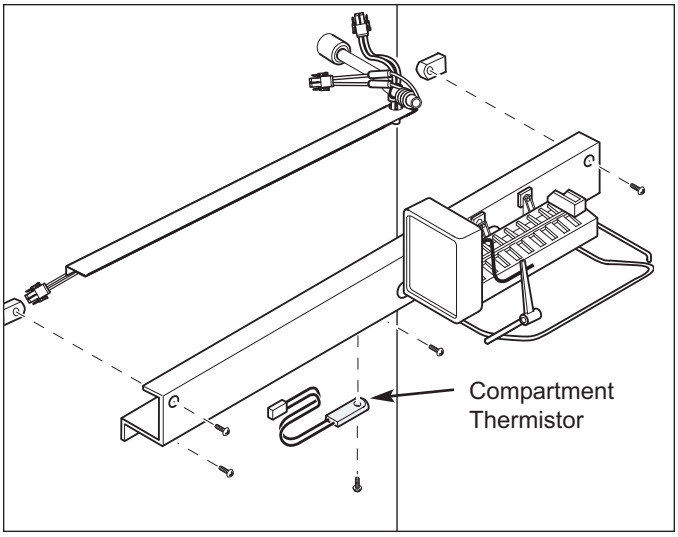

Figure 7-60. Compartment Thermistor

Icemaker Fill Tube Heater (601F-3)

The icemaker fill tube and fill tube heater are located at top right of icemaker, just below freezer glass shelf and above the drain trough enclosure. The icemaker fill tube heater plugs into the wire harness behind the drain trough enclosure.

To remove the fill tube heater, the drain trough enclosure must be disconnected from the back wall first, then (See Figure 7-61):

1. Disconnect fill tube heater from wire harness.
2. Slide fill tube heater off of fill tube.

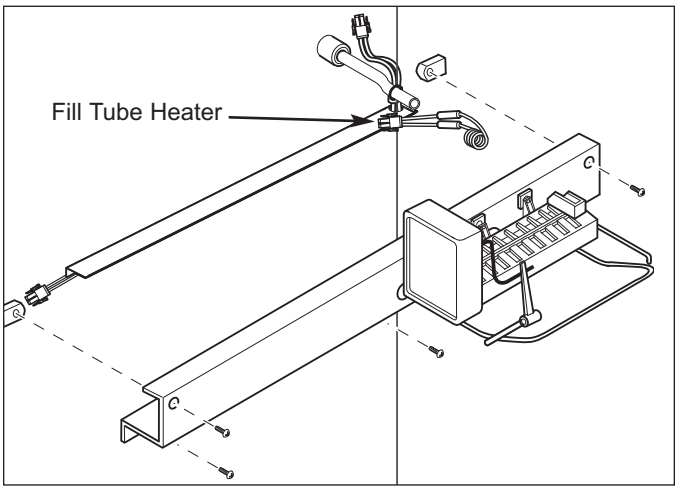

Figure 7-61. Fill Tube Hearer

Freezer Drain Tube Heater (601F-3)

The braided wire drain tube heater is connected to the wire harness behind the drain trough enclosure.

To remove the heater, drain trough enclosure must be disconnected from back wall, then (See Figure 7-62):

1. Disconnect heater from wire harness
2. Extract clamp which holds heater in place, and pull drain tube heater from drain tube.

NOTE: *When replacing the drain tube heater, it is necessary to insert it a minimum of 3" into the drain tube.*

Drain Trough Heater (601F-3)

The drain trough heater consists of a braided wire heater sandwiched between two strips of aluminum foil, one of which has adhesive on the outside to hold the heater to the bottom of the drain trough.

To remove the heater, drain trough enclosure must be disconnected from back wall, then (See Figure 7-62):

1. Disconnect heater from wire harness
2. Peel heater from bottom of drain trough.

NOTE: *When replacing the drain trough heater, bottom of drain trough must be dry in order for heater to stick.*

Control Board (601F-3)

The control board is held in position by two sets of tabs behind the left side of the control panel assembly. The two forward tabs position the LCD in the control panel window, while the other two tabs secure the middle of the control board. The control board is then shielded by a control enclosure, and concealed by the light diffuser.

To remove the control board, the light diffuser must first be removed, then (See Figures 7-63 and 7-64):

1. Extract screws securing control enclosure to ceiling of compartment.
2. Lower back of enclosure while pulling it toward rear of unit.
3. Disconnect all electrical leads from control board.
   NOTE: *Observe orientation of membrane switch ribbon cable so it can be reconnected correctly.*
4. Expand the two tabs at middle of control board outward while pulling back of board down slightly.
5. Expand the two tabs outward that hold LCD.
6. Pull control board down and toward rear of unit.

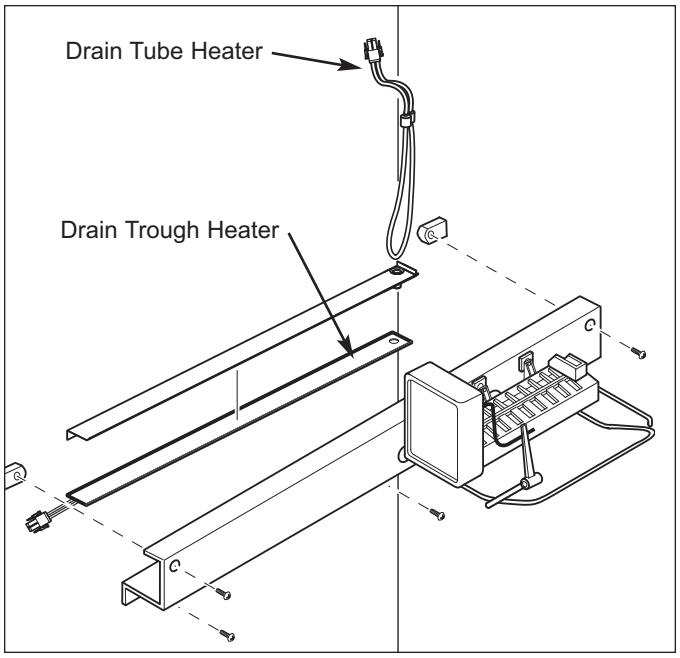

Figure 7-62. Drain Trough and Drain tube Heaters

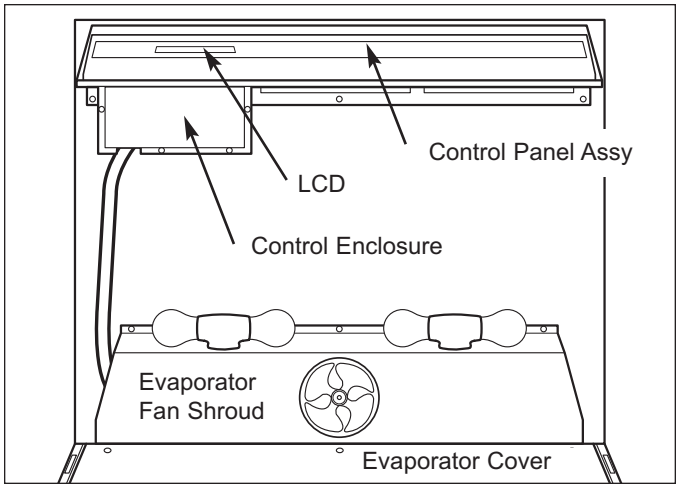

Figure 7-63. View of Compartment Top

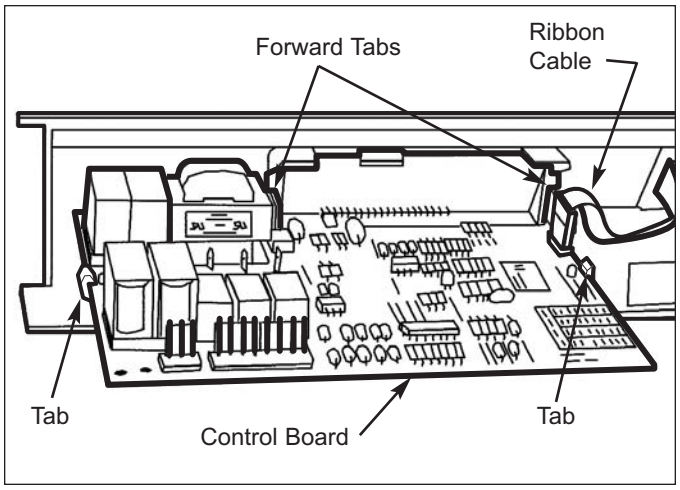

Figure 7-64. Control Board

Control Panel Assembly (601F-3)

The control panel assembly is secured to the ceiling of the compartment by two rows of screws. The front row of screws (which are hidden) pass through spacers and fit into keyhole slots in the panel assembly. The back row of screws hold the assembly in place.

To remove a control panel assembly, the light diffuser must be removed first, then (See Figure 7-65):

1. Disconnect membrane switch ribbon cable from control board.

   NOTE: *Observe orientation of membrane switch ribbon cable so it can be reconnected correctly.*
2. Detach control board from control panel assembly.
3. Extract back row of screws from panel assembly.
4. Push panel assembly back to line up front row of screws with keyhole slots.
5. Lower panel assembly down and pull out.

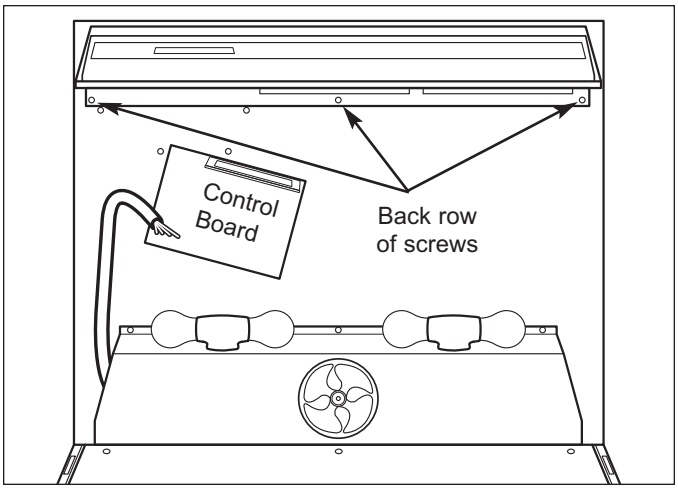

Figure 7-65. View of Compartment Top

Freezer Evaporator Fan Shroud Assembly (601F-3)

The Evaporator fan shroud assembly is secured to the ceiling of the compartment with screws.

To remove the evaporator fan shroud assembly, the light diffuser, freezer glass shelf and evaporator cover must be removed first, then (See Figure 7-66):

1. Extract mounting screws.
2. Lower assembly and disconnect lighting wire harness.

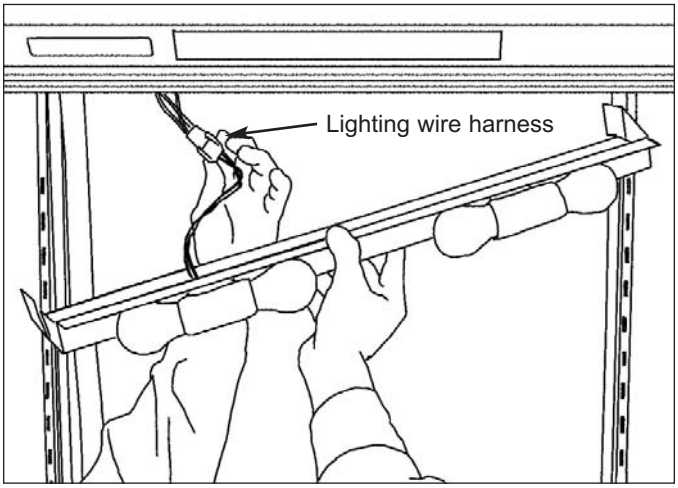

Figure 7-66. Fan Shroud

Freezer Evaporator Fan Assembly (601F-3)

Evaporator fan assemblies are secured to the ceiling of the compartment with screws.

To remove an evaporator fan assembly, the light diffuser, freezer glass shelf, evaporator cover and fan shroud must be removed first, then (See Figure 7-67):

1. Disconnect fan electrical leads.
2. Extract mounting screws and pull assembly from unit.

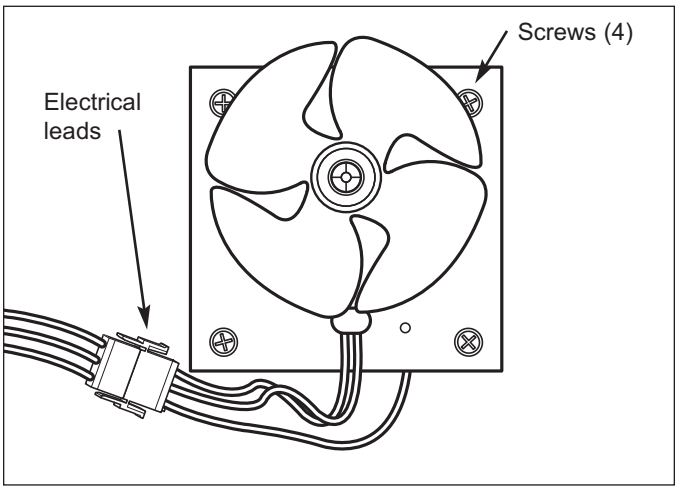

Figure 7-67. Evaporator Fan Assembly

Freezer Evaporator Thermistor (601F-3)

The freezer evaporator thermistor is attached to the left evaporator bracket.

To remove the freezer evaporator thermistor, the light diffuser, freezer glass shelf and evaporator cover must be removed first, then (See Figure 7-68):

1. Disconnect thermistor electrical leads.

   NOTE: *On newer models the thermistor is hard-wired to the control board, so it will be necessary to cut the thermistor wires to remove it.*
2. Extract mounting screws an pull thermistor from unit.

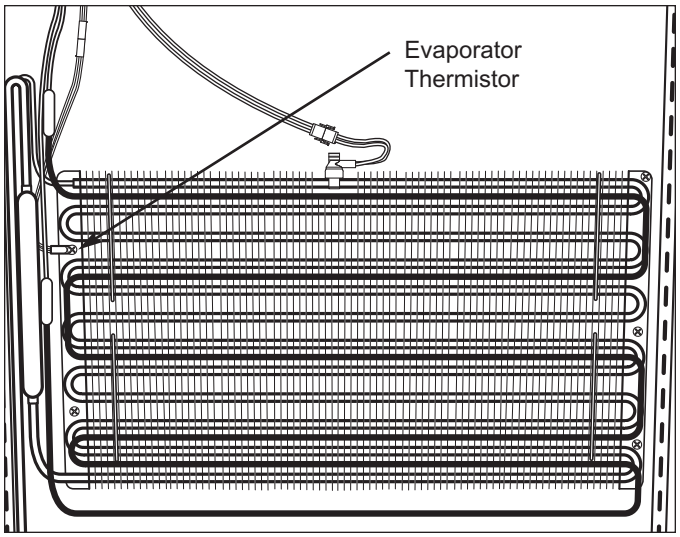

Figure 7-68. Freezer Evaporator Thermistor

Defrost Terminator (601F-3)

The defrost terminator is attached to the top center pass of the evaporator.

To remove the defrost terminator, the light diffuser, freezer glass shelf and evaporator cover must be removed first, then (See Figure 7-69):

1. Disconnect terminator electrical leads.
2. Pull terminator off of evaporator.

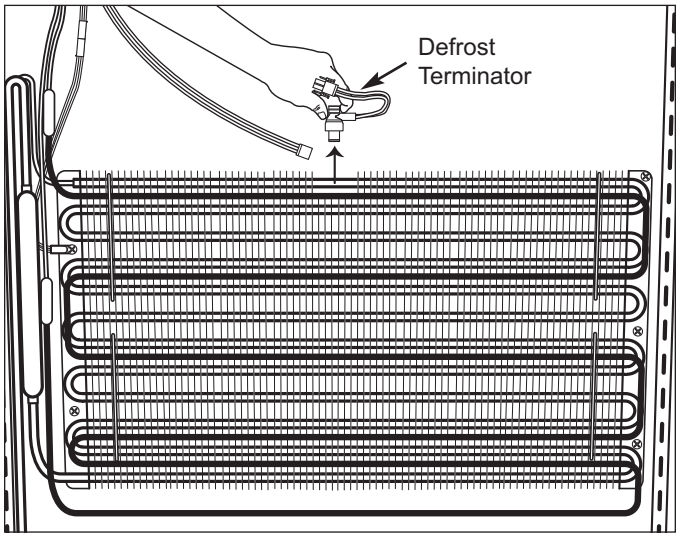

Figure 7-69. Defrost Terminator

Evaporator Defrost Heater (601F-3)

The defrost heater is inserted into channels in the fins of the evaporator. C-shaped heater clips are hooked from one evaporator tube to another, over the heater, to hold it in place.

To remove the defrost heater, the light diffuser, freezer glass shelf and evaporator cover must be removed first, then (See Figure 7-70):

1. Disconnect heater electrical leads.
2. With a needle-nose pliers, or similar tool, detach heater clips by pulling tab of clips away from evaporator.
3. Gently pull defrost heater from fins of evaporator.

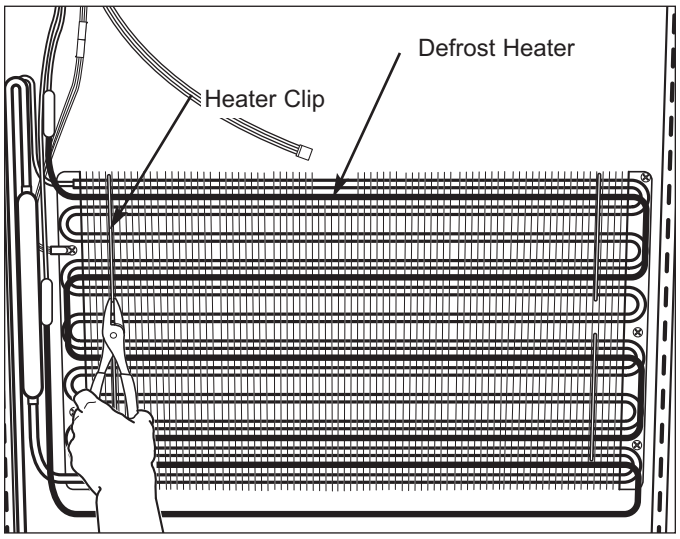

Figure 7-70. Defrost Heater

FREEZER INTERIOR COSMETIC / MECHANICAL (MODELS 611-3, 611G-3, 650-3, 650G-3)

Ice Bucket (611-3, 611G-3, 650-3, 650G-3)

Remove ice bucket by lifting out of left rear corner of upper freezer basket (not shown).

Freezer Light Bulb (611-3, 611G-3, 650-3, 650G-3)

There is no light diffuser in the freezer of these models. The light bulbs are located in front of evaporator cover.

Turn bulb counterclockwise to remove, clockwise to install (See Figure 7-71).

⚠ WARNING

IF BULB SHOULD SEPARATE FROM BASE, DISCONNECT POWER TO UNIT BEFORE ATTEMPTING TO REMOVE BASE.

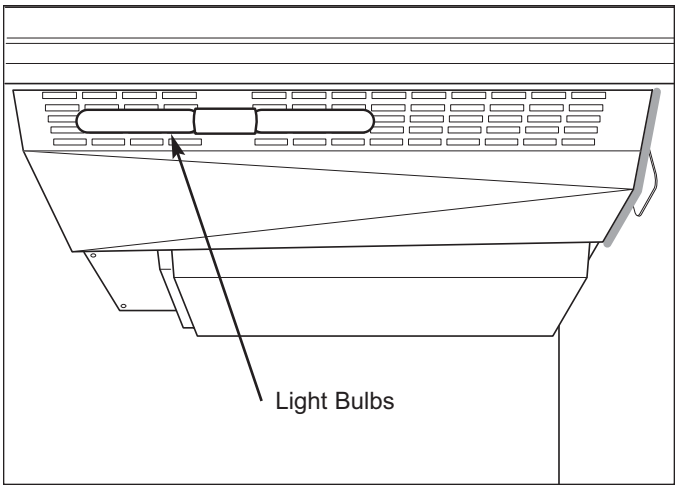

Figure 7-71. Freezer Light Bulbs

Freezer Upper Basket Assembly (611-3, 611G-3, 650-3, 650G-3)

To remove upper basket assembly (See Figure 7-72):

1. Pull upper basket fully forward.
2. Lift front of basket up slightly, then push upper basket slides back to disengage slide hooks from the slots at rear of basket assembly.
3. Continue pulling basket forward while lifting it up off of the slides.

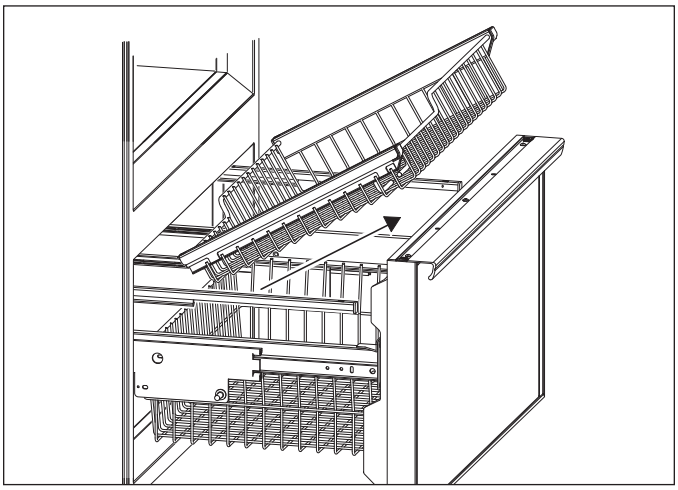

Figure 7-72. Freezer Upper Basket Assembly

Freezer Lower Basket Assembly (611-3, 611G-3, 650-3, 650G-3)

To remove a lower basket assembly, start with the freezer drawer fully open, and upper basket fully in, or removed. Then, lift the lower freezer basket up, off of the basket retainers, and out of the freezer compartment. (See Figure 7-73)

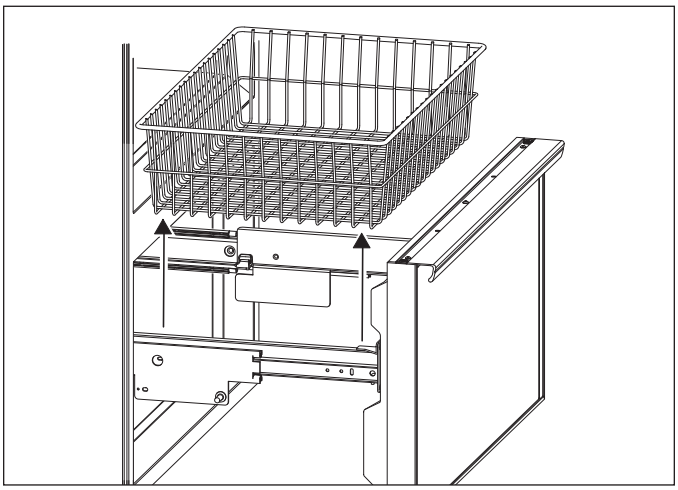

Figure 7-73. Freezer Lower Basket Assembly

Upper Freezer Basket Full Extension Slide
(611-3, 611G-3, 650-3, 650G-3)

The upper freezer basket full extension slides are attached to the side walls of the freezer with screws.

To remove an upper freezer basket full extension slide, first remove the drawer front assembly and both freezer baskets, then extract the slide mounting screws and pull the slide from the freezer compartment. (See Figure 7-74)

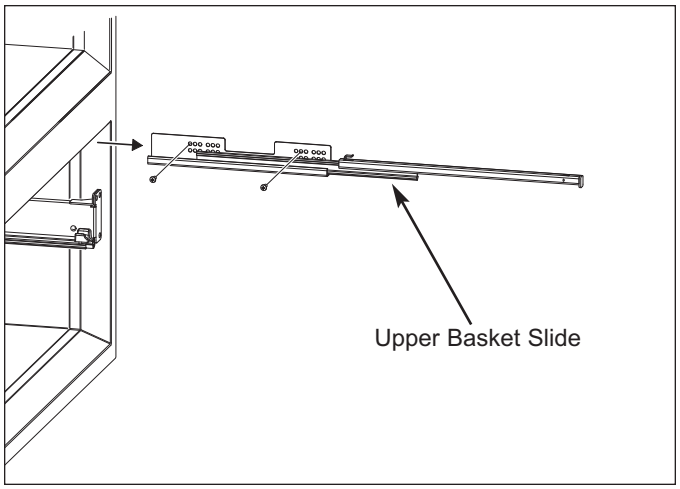

Figure 7-74. Upper Basket Full Extension Slide

Freezer Drawer Slide Rail Assembly
(611-3, 611G-3, 650-3, 650G-3)

The drawer slide rail assemblies are attached to the full extension drawer slides with screws.

To remove a drawer slide rail assembly, first remove the drawer front assembly and the lower freezer basket, then (See Figure 7-75):

1. Extend slide rail out fully.
2. Extract slide rail mounting screws, then lift slide rail from the slide.

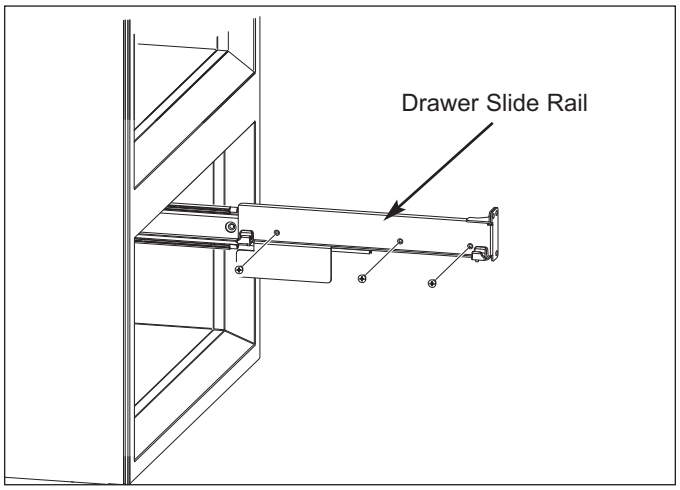

Figure 7-75. Freezer Drawer Slide Rail

Freezer Full Extension Drawer Slide Assembly
(611-3, 611G-3, 650-3, 650G-3)

The full extension drawer slide assemblies are attached to the side walls with screws.

To remove a full extension drawer slide assembly, first remove the drawer front assembly, lower freezer basket and drawer slide rail assembly, then (See Figure 7-76):

1. Extend drawer slide until front access hole lines up with front mounting screw.
2. Extract slide mounting screws, then pull slide from the freezer compartment.

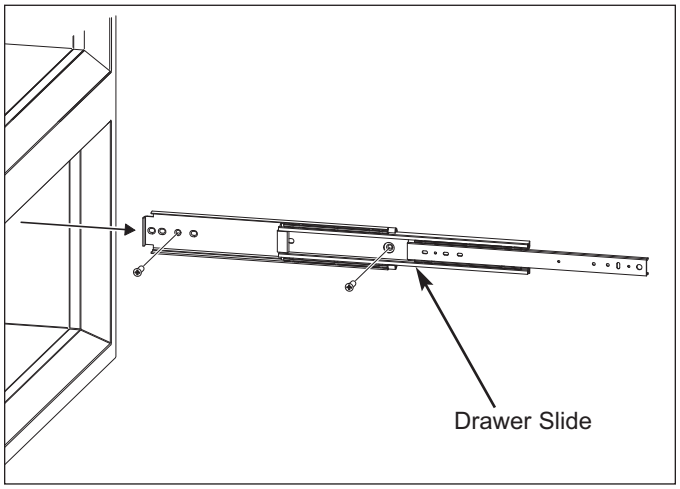

Figure 7-76. Full Extension Drawer Slide Assy.

Freezer Drawer Closer Assembly
(611-3, 611G-3, 650-3, 650G-3)

The drawer closer assembly is attached to the left side wall with screws.

To access and remove a drawer closer assembly, first remove the drawer front assembly and the lower freezer basket. Then, extract the screws that secure the drawer closer to the side wall. (See Figure 7-77)

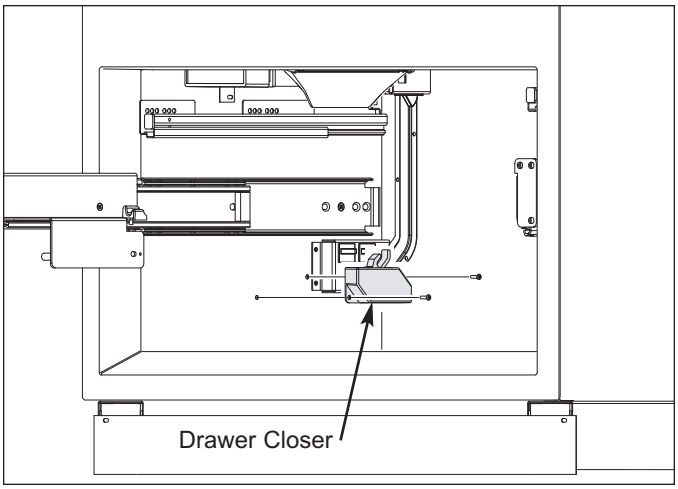

Figure 7-77. Drawer Closer

Freezer Fan and/or Light Switch
(611-3, 611G-3, 650-3, 650G-3)

The fan and light switches are in the lower switch enclosure, which is attached to the side wall with screws.

To remove a fan or light switch, first remove the drawer front assembly and the lower freezer basket, then (See Figure 7-78):

1. Extract switch box mounting screws.
2. Flip the switch box over and disconnect switch electrical leads.
3. Depress the tabs at back side of switch and push switch from hole in switch box.

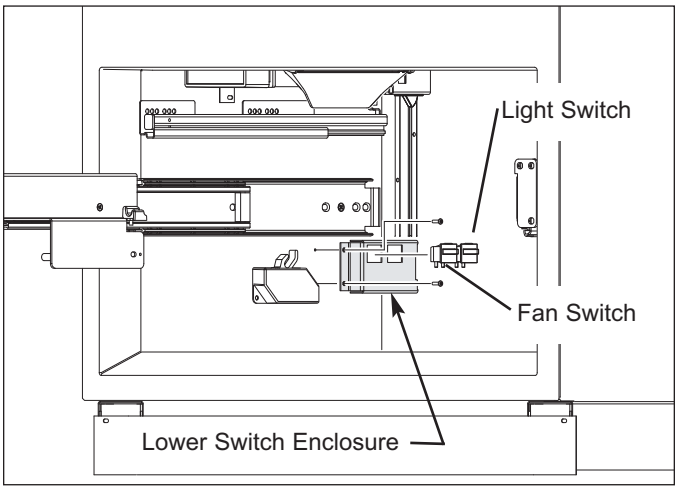

Figure 7-78. Fan and Light Switch

Icemaker Assembly **(611-3, 611G-3, 650-3, 650G-3)**

The icemaker assembly is attached to the upper left-hand wall of the freezer compartment with two screws at top and one at the bottom.

To remove the icemaker assembly, first remove the drawer front assembly, lower freezer basket and upper freezer basket, then (See Figure 7-79):

1. Extract screw at bottom left of icemaker.
2. Extract screws at top of icemaker.
3. Pull icemaker forward and disconnect electrical leads.

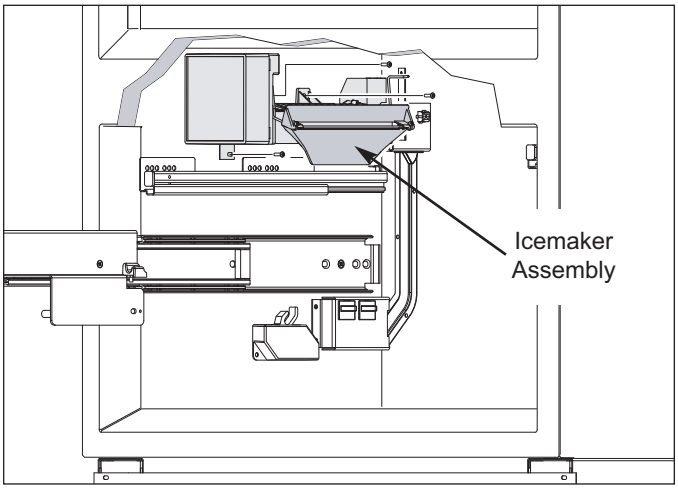

Figure 7-79. Icemaker

Freezer Ice Bucket (Icemaker) Switch
(611-3, 611G-3, 650-3, 650G-3)

The ice bucket switch is in the upper switch enclosure, which is attached to the side wall with screws.

To remove the ice bucket switch, first remove the drawer front assembly, lower and upper freezer baskets, and the icemaker, then (See Figure 7-80):

1. Extract switch box mounting screws.
2. Flip the switch box over and disconnect switch electrical leads.
3. Depress the tabs at back side of switch and push switch from hole in switch box.

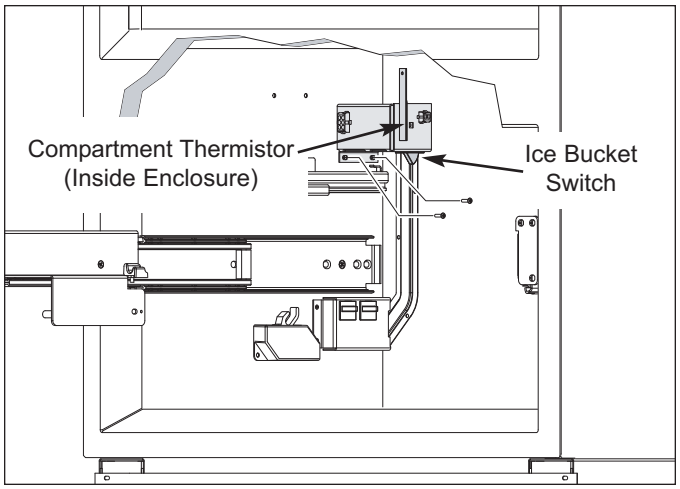

Figure 7-80. Ice Bucket Switch and Compartment Thermistor

Freezer Compartment Thermistor
(611-3, 611G-3, 650-3, 650G-3)

The freezer compartment thermistor is located inside the upper switch enclosure.

To remove the compartment thermistor, first remove the drawer front assembly, lower and upper freezer baskets, and the icemaker, then (See Figure 7-80):

1. Extract screws securing switch enclosure to wall.
2. Lower enclosure, then disconnect thermistor wire leads from wire harness.

   NOTE: *On newer models the thermistor is hard-wired to the control board, so it will be necessary to cut the thermistor wires to remove it.*
3. Extract screw which secures thermistor to inside of enclosure.

Freezer Air Duct (611-3, 611G-3, 650-3, 650G-3)

The freezer air duct is located at the top rear of the freezer compartment, directly behind evaporator cover.

To remove the air duct (See Figures 7-81):

1. Extract screws at front flange of duct.
2. Pull front flange of duct down and forward.

NOTE: *When reinstalling freezer air duct, rear flange of air duct must sit on top of the two lower white pegs in rear wall.*

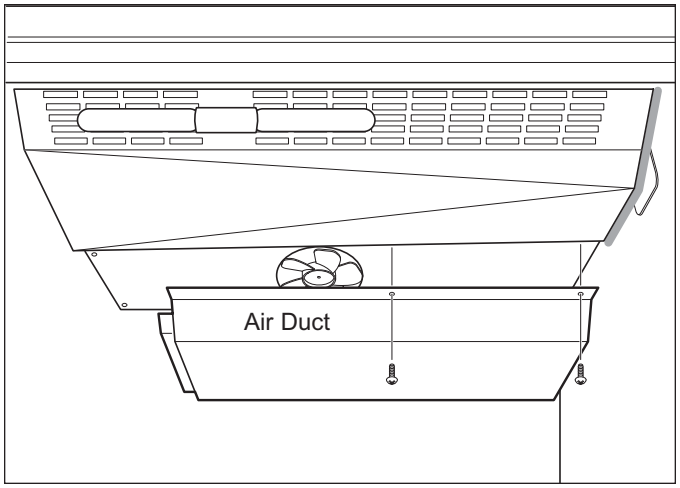

Figure 7-81. Air Duct

Freezer Evaporator Cover
(611-3, 611G-3, 650-3, 650G-3)

The freezer evaporator cover is located at the top of the freezer compartment, and the right side is sealed to the right wall with silicone.

To remove the freezer evaporator cover, the freezer air duct must be removed first, then (See Figures 7-82):

1. With a knife, cut silicone seal at right side of evaporator cover.
2. Extract screws from evaporator cover back & front.
3. Pull left side of evaporator cover down and disconnect electrical leads to lights.
4. Continue pulling cover down and to the left.

NOTE: *When replacing evaporator cover it is important to reseal right side with silicone. Failure to do so could cause an icing situation in freezer compartment.*

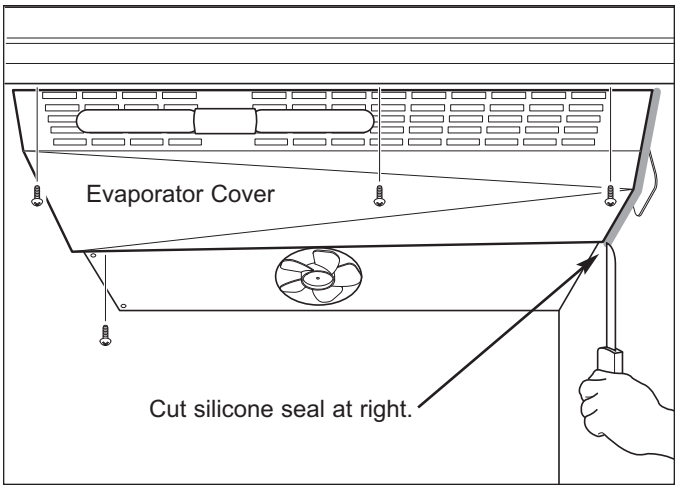

Figure 7-82. Evaporator Cover

Freezer Evaporator Fan Assembly
(611-3, 611G-3, 650-3, 650G-3)

The evaporator fan is attached to the fan shroud with a bracket and screws. This assembly is located behind the evaporator cover, and above the freezer air duct.

To remove the evaporator fan assembly, the freezer air duct and freezer evaporator cover must be removed first, then (See Figures 7-83):

1. Extract screws at left side of fan shroud.
2. Tilt front edge of shroud down and disconnect fan motor wiring from wire harness.
3. Pull assembly forward and out.

   NOTE: *The freezer evaporator fan can now be removed from fan shroud.*

NOTE: *When reinstalling freezer evaporator fan assembly, the oblong holes in rear flange of fan shroud must be placed over the two upper white pegs in rear wall.*

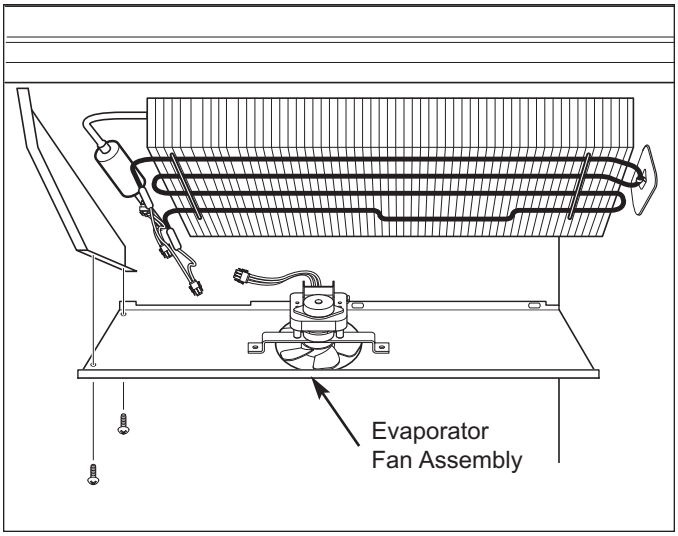

Figure 7-83. Evaporator Fan

Freezer Evaporator Thermistor (611-3, 611G-3, 650-3, 650G-3)

The freezer evaporator thermistor is attached with a screw to the left evaporator bracket.

To remove the evaporator thermistor, the freezer air duct, evaporator cover and evaporator fan assembly must be removed first, then (See Figures 7-84):

1. Disconnect thermistor wire leads from wire harness.
   NOTE: On newer models the thermistor is hard-wired to the control board, so it will be necessary to cut the thermistor wires to remove it.
2. Extract screw which secures thermistor to left evaporator bracket.

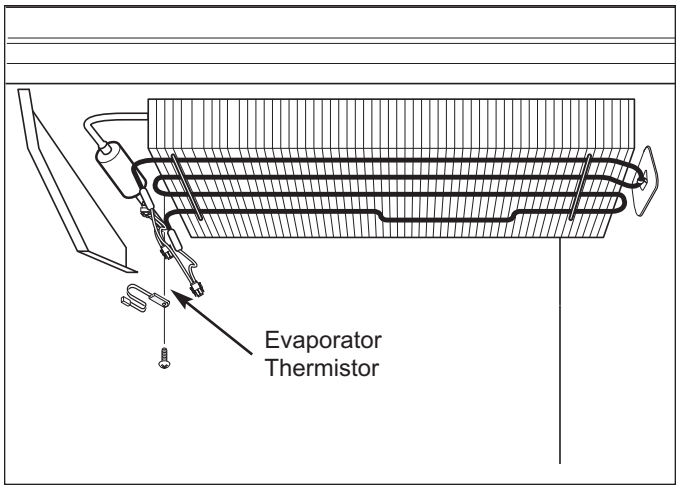

Figure 7-84. Evaporator Thermistor

Defrost Terminator (611-3, 611G-3, 650-3, 650G-3)

The defrost terminator is attached to the evaporator outlet, after the accumulator.

To remove the defrost terminator, the freezer air duct, freezer evaporator cover and evaporator fan assembly must be removed first, then (See Figures 7-85):

1. Disconnect terminator wire leads from wire harness.
2. Pull terminator off of tubing.

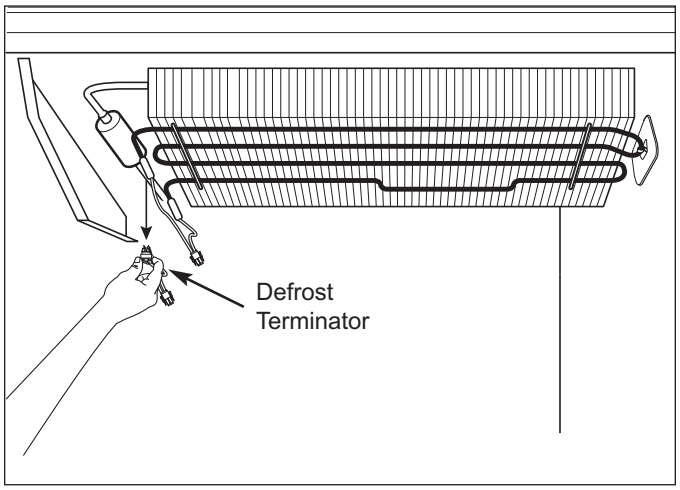

Figure 7-85. Defrost Terminator

Defrost Heater (611-3, 611G-3, 650-3, 650G-3)

The defrost heater is inserted into channels in the fins of the evaporator. C-shaped heater clips are hooked from one evaporator tube to another, over the heater, to hold it in place.

To remove the defrost heater, the freezer air duct, freezer evaporator cover and evaporator fan assembly must be removed first, then (See Figures 7-86):

1. Disconnect heater wire leads from wire harness.
2. With pliers, or similar tool, detach heater clips by pulling tab of clips away from evaporator.
3. Gently pull heater down and to the left, out of evaporator fins.

NOTE: A heater strap is wrapped around the defrost heater, then inserted into the drain cup. This strap conducts heat into the drain cup during defrost. This strap must be reinstalled when replacing the defrost heater.

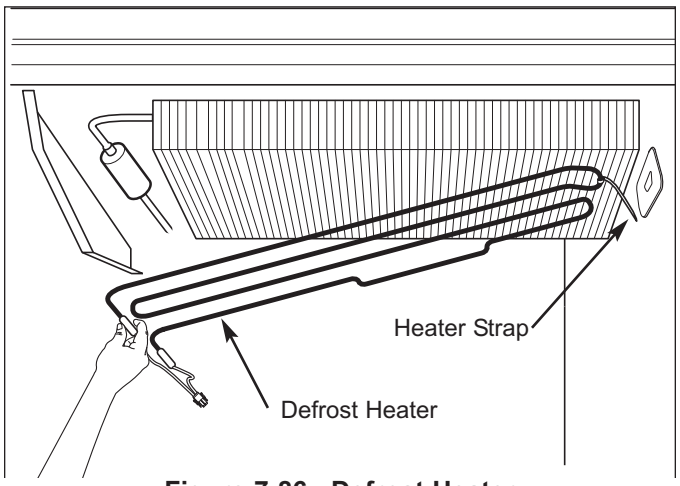

Figure 7-86. Defrost Heater

FREEZER INTERIOR COSMETIC / MECHANICAL (MODELS 632-3, 642-3, 661-3)

Freezer Door Shelf Assembly Removal and Adjustment (632-3, 642-3, 661-3)

Removal and adjustment of door shelf assemblies is achieved by sliding the grooves in the end caps over the molded retaining ribs of the door liner.

Lift up and out to remove, push in and down to install (See Figure 7-87).

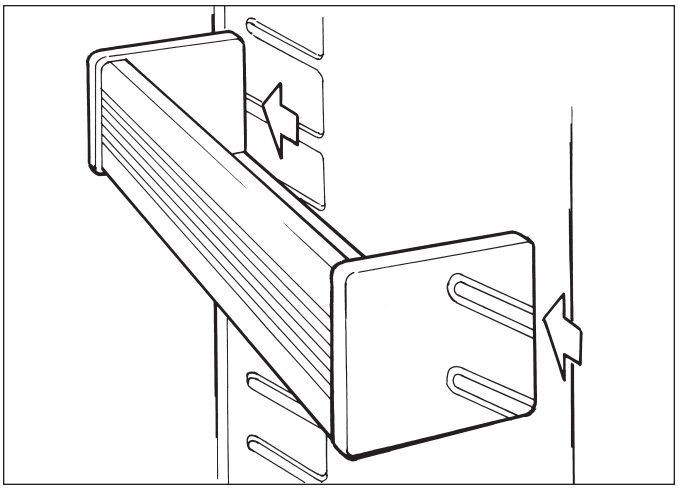

Figure 7-87. Door Shelf

Freezer Compartment Shelf Removal and Adjustment (632-3, 642-3, 661-3)

Remove and adjust shelf by tilting up at front while lifting the back up and out of the shelf ladders (See Figure 7-88).

To reinstall, tilt front of shelf up and align hooks at back corners with slots in shelf ladders, then insert hooks into slots and lower front of shelf.

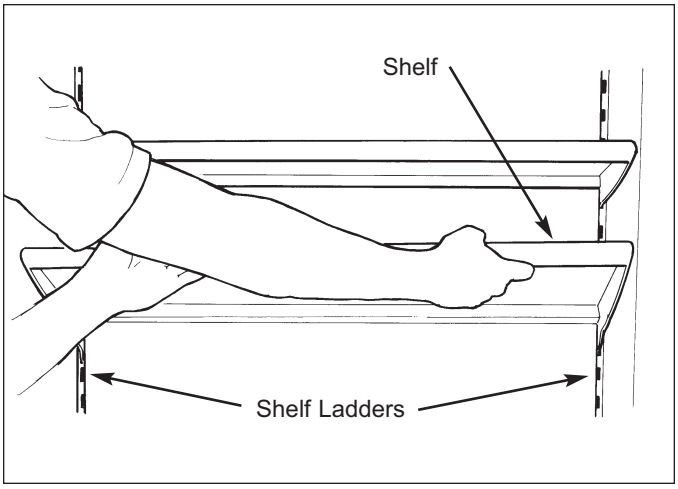

Figure 7-88. Compartment Shelf

Upper Light Diffuser (632-3, 642-3, 661-3)

Side frames of light diffusers have inverted “T” shaped slots (two each side) which fit up over pegs protruding from side walls. For safety purposes, retainer clips by the rear slots secure the light diffuser to the rear studs.

To remove the light diffuser (See Figure 7-89):

1. Slide fingers over retaining clips and rotate down.
2. With clips open, lift diffuser up and slide toward rear of unit until center of “T” slots line up with the pegs.
3. Then lower light diffuser and remove from unit.

⚠ WARNING

IF BULB SHOULD SEPARATE FROM BASE, DISCONNECT POWER TO UNIT BEFORE ATTEMPTING TO REMOVE BASE.

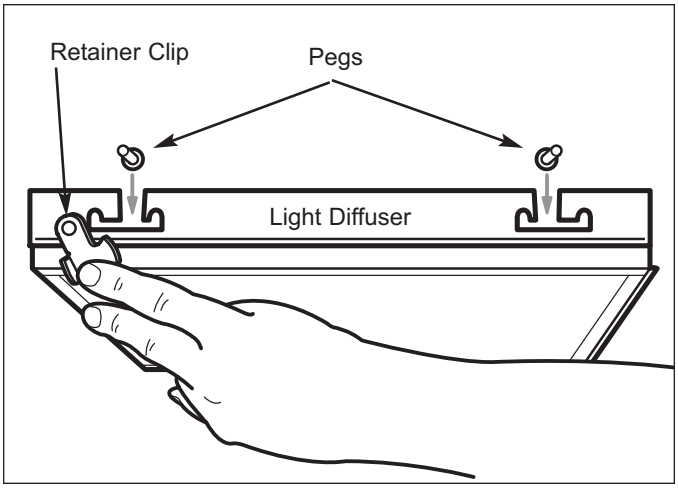

Figure 7-89. Upper Light Diffuser

Freezer Upper Front Panel Assembly (632-3, 642-3, 661-3)

The upper front panel assembly is secured to the ceiling of a compartment by two rows of screws. The front row of screws (which are hidden) pass through spacers and fit into keyhole slots in the panel assembly. The back row of screws hold the assembly in place.

To remove a upper front panel assembly, the light diffuser must be removed first, then (See Figure 7-90):

1. Extract back row of screws from panel assembly.
2. Push panel assembly back to line up front row of screws with keyhole slots.
3. Lower panel assembly down and pull out.

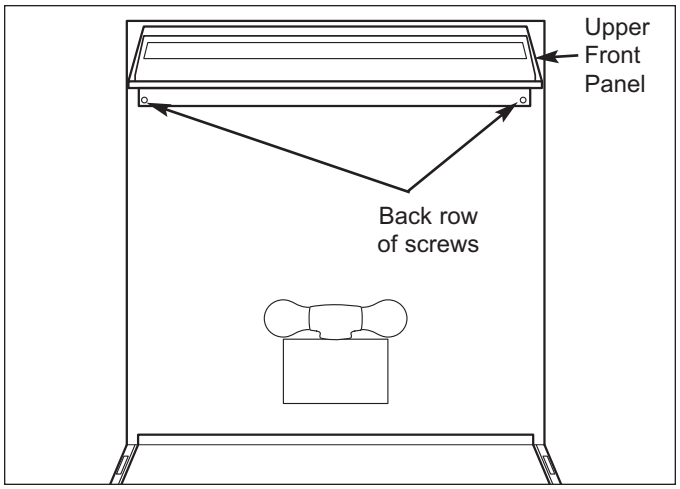

Figure 7-90. View of Compartment Top

Freezer Basket Assembly (632-3, 642-3, 661-3)

To remove freezer basket assembly (See Figure 7-91):

1. Pull basket open until it stops.
2. Lift up at front and pull out.

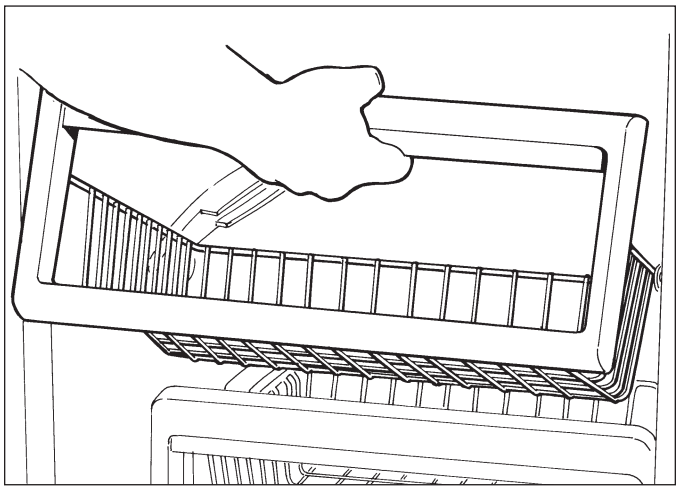

Figure 7-91. Freezer Basket

Ice Bucket Assembly (632-3, 642-3, 661-3)

A flange at the back of the ice bucket assembly hooks over the top edge of the ice bucket carriage assembly.

To remove the ice bucket assembly (See Figure 7-92):

1. Pull ice bucket open until it stops.
2. Lift up and pull forward.

NOTE: *To reinstall ice bucket, pull ice bucket carriage assembly all the way forward before attempting to hook flange at back of ice bucket over top edge of carriage assembly.*

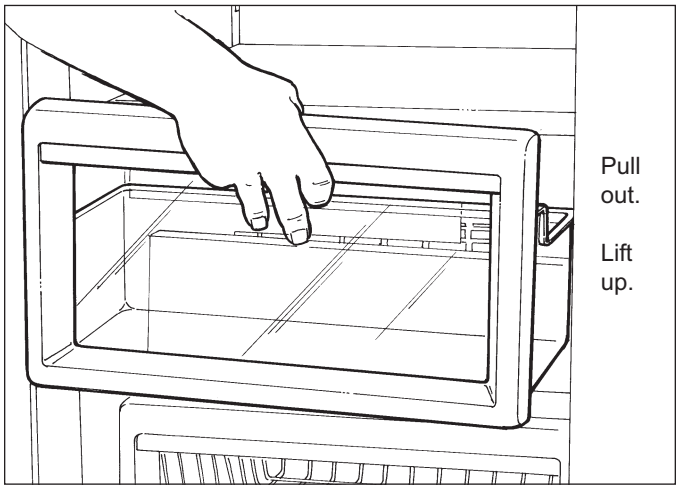

Figure 7-92. Ice Bucket Assembly

Icemaker Assembly (632-3, 642-3, 661-3)

The icemaker assembly attached to the evaporator cover with two screws at top and one at bottom.

To remove the icemaker assembly, remove the freezer shelves and ice bucket first. Push the ice bucket carriage assembly back in, then (See Figures 7-93):

1. Extract screws from evaporator shelf front.
2. Pull freezer duct/shelf forward slightly to allow greater access to icemaker assembly.
3. Disconnect ice level mechanism by sliding connecting rod to right, off of shut-off arm, allowing ice level arm to drop out of the way.
4. Extract screws from bottom left & top of icemaker.
5. Lift icemaker up slightly to clear ice level arm, then pull forward and disconnect electrical leads.

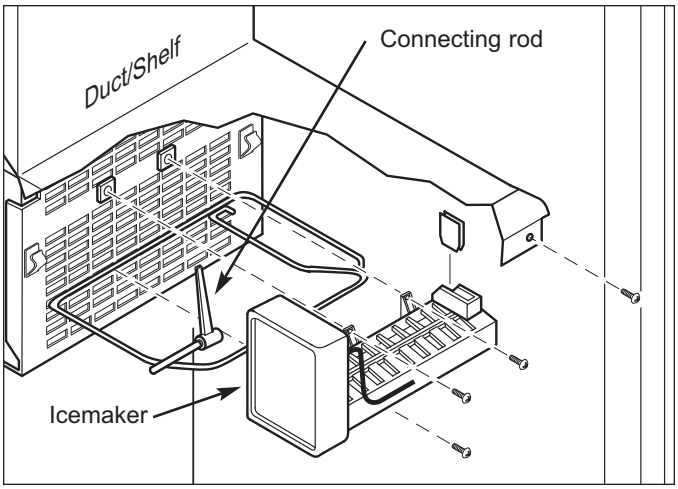

Figure 7-93. Icemaker

Ice Bucket Carriage Assembly (632-3, 642-3, 661-3)

The ice bucket carriage assembly rollers are captivated by the ice bucket slides attached to each side wall.

To remove the ice bucket carriage assembly, remove the ice bucket first and push the ice bucket carriage assembly back in, then (See Figures 7-94):

1. Extract the two front most screws from each ice bucket slide.

   NOTE: *It is not necessary to remove the screws that fit into slots at the bottom rear of each slide.*
2. Pull slides and carriage assembly forward and out.

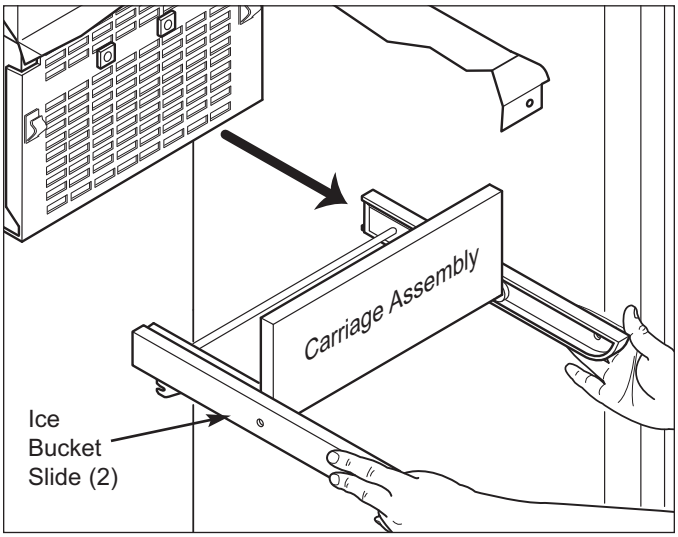

Figure 7-94. Ice Bucket Carriage Assy

Compartment Thermistor (632-3, 642-3, 661-3)

The freezer compartment thermistor is attached to the left side wall with a screw, in the icemaker area.

To remove the thermistor, remove the ice bucket and icemaker first, then (See Figures 7-95):

1. Disconnect thermistor electrical leads.

   NOTE: *On newer models the thermistor is hard-wired to the control board, so it will be necessary to cut the thermistor wires to remove it.*
2. Extract mounting screws an pull thermistor from unit.

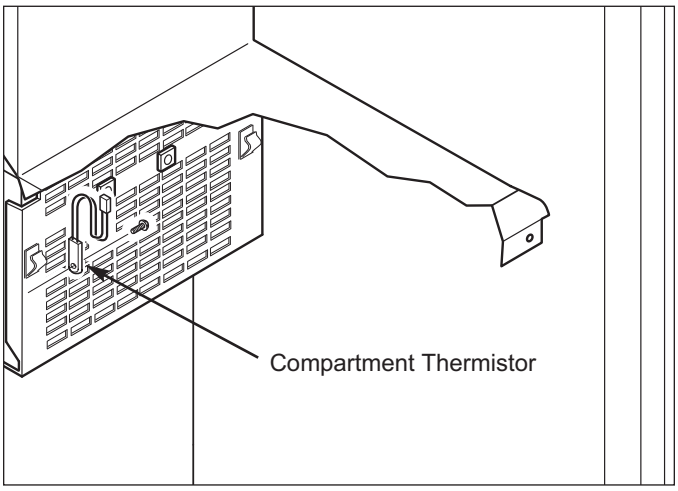

Figure 7-95. Compartment Thermistor

Freezer Lower Light Diffuser (632-3, 642-3, 661-3)

The lower light diffuser is a flexible plastic material and is held in place with diffuser retainers at top and bottom.

To remove the lower light diffuser, remove the top freezer basket first, then (See Figures 7-96):

1. Push top of diffuser down, causing it to flex and release from top retainer.
2. Pull diffuser forward.

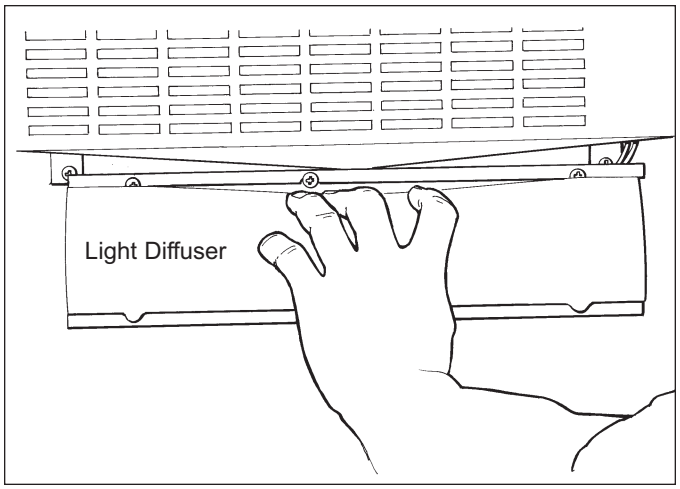

Figure 7-96. Lower Light Diffuser

Freezer Duct/Shelf Assembly (632-3, 642-3, 661-3)

The freezer duct/shelf assembly is secured at the top by slots in the side flanges fitting over pegs at the top of each shelf ladder. Screws at the shelf front hold the duct/shelf to supports in the side walls.

To remove the freezer duct/shelf assembly, remove the freezer light diffuser, freezer shelves and ice bucket first, then (See Figures 7-97):

1. Pull grounding clip terminal from top flange of duct/shelf and pull duct/shelf out.
2. Extract screws from evaporator shelf front.
3. Pull freezer duct/shelf forward and down.

NOTE: *When reinstalling freezer duct/shelf, be sure to reattach grounding clip terminal to top flange.*

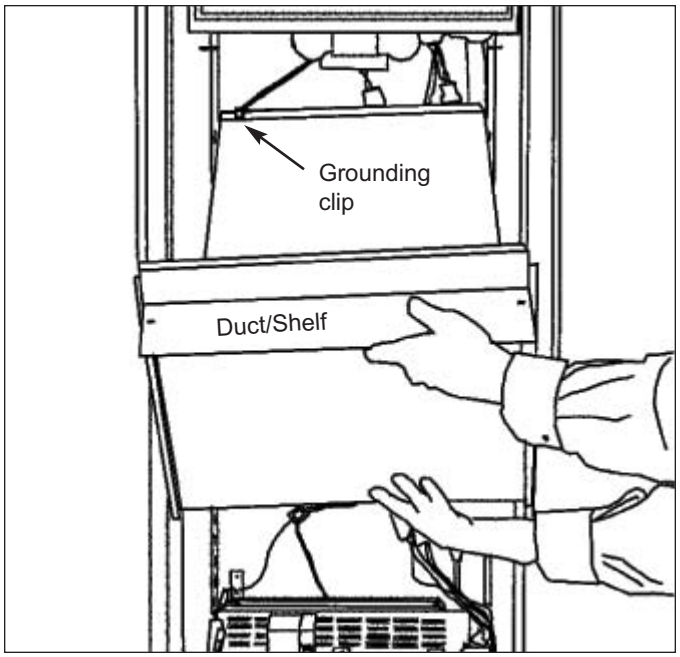

Figure 7-97. Duct/Shelf

Fill Tube Heater (632-3, 642-3, 661-3)

To remove the fill tube heater, remove the freezer shelves, ice bucket and duct/shelf assembly first, then (See Figures 7-98):

1. Disconnect heater wire leads from wire harness.
2. Slide heater off of fill tube.

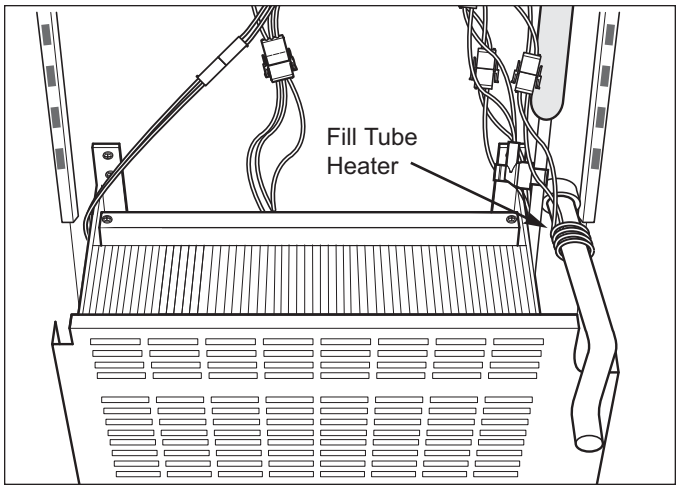

Figure 7-98. Fill Tube Heater

Defrost Terminator (632-3, 642-3, 661-3)

The defrost terminator is clipped onto the evaporator outlet, after the accumulator.

To remove the defrost terminator, remove the freezer shelves, ice bucket and duct/shelf assembly first, then (See Figures 7-99):

1. Disconnect terminator wire leads from wire harness.
2. Pull terminator off of tubing.

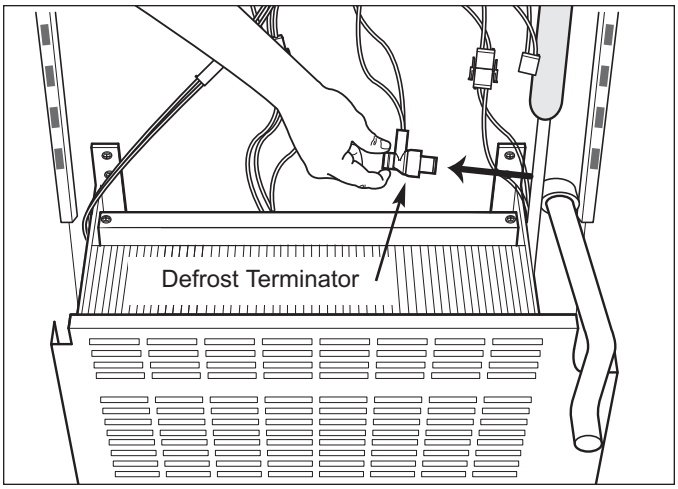

Figure 7-99. Defrost Terminator

Freezer Evaporator Fan Assembly (632-3, 642-3, 661-3)

Two screws at the top of the evaporator fan shroud secure the evaporator fan assembly to the evaporator brackets at the back of the evaporator.

To remove the evaporator fan assembly, remove the freezer shelves, ice bucket and duct/shelf assembly first, then (See Figures 7-100):

1. Disconnect evaporator fan wire leads from wire harness.
2. Extract retaining screws at top of evaporator fan shroud.
3. Pull fan assembly up, slightly forward, and out.

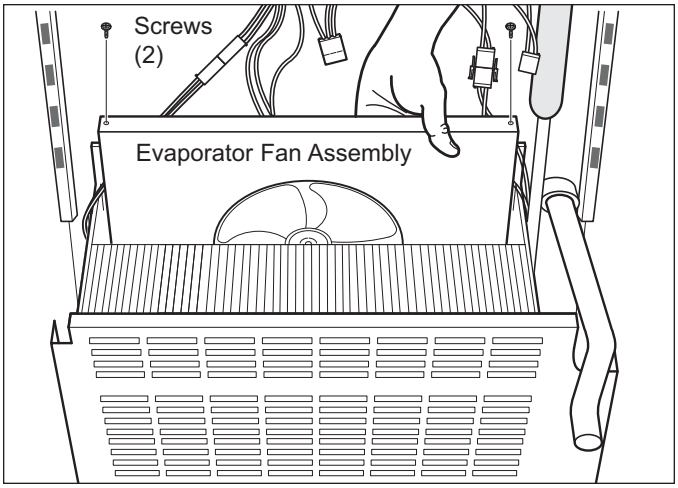

Figure 7-100. Evaporator Fan

Freezer Evaporator Cover (632-3, 642-3, 661-3)

A grounding screw secures the evaporator cover to a bracket at the front of the evaporator. The evaporator cover also bends back underneath the evaporator to act as the drain trough.

To remove the evaporator cover, remove the freezer shelves, ice bucket and duct/shelf assembly first, then (See Figures 7-101):

1. Extract ground screw at front of evaporator cover.
2. Lean evaporator cover forward to gain access to drain tube heater, then pull drain tube heater from drain tube.
3. Pull evaporator cover forward while pulling drain tube off of drain spout.

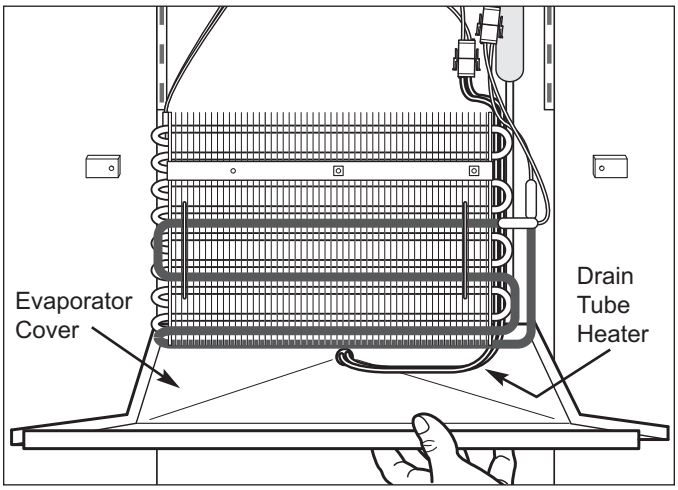

Figure 7-101. Evaporator Cover

Defrost Heater (632-3, 642-3, 661-3)

The defrost heater is inserted into channels in the evaporator fins. C-shaped heater clips hook from one evaporator tube to another, over heater, to hold it in place.

To remove the defrost heater, remove the freezer shelves, ice bucket, duct/shelf assembly and evaporator cover first, then (See Figures 7-101):

1. Disconnect heater wire leads from wire harness.
2. With needle-nose pliers, or similar tool, detach heater clips by pulling clips away from evaporator.
3. Gently pull defrost heater from fins of evaporator.

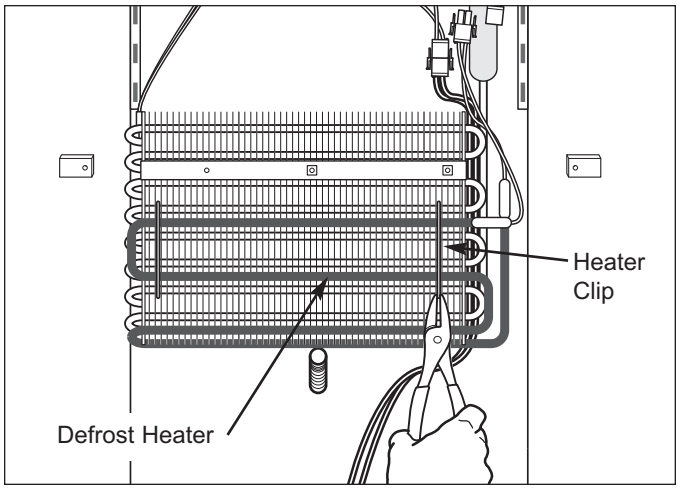

Figure 7-102. Defrost Heater

Freezer Drain Tube Heater (632-3, 642-3, 661-3)

The drain tube heater runs down the right side of the evaporator. A clamp at the bottom right of the evaporator holds the heater in place. It is then routed to the drain tube at bottom center rear of evaporator cover.

To remove the drain tube heater, remove the freezer shelves, ice bucket, duct/shelf assembly and evaporator cover first, then (See Figures 7-103):

1. Disconnect heater wire leads from wire harness.
2. Extract screws which secure evaporator to rear wall of freezer compartment.
3. Rotate evaporator to left to gain access to clamp holding heater at bottom right rear of evaporator.
4. Extract screw holding clamp and pull heater out.

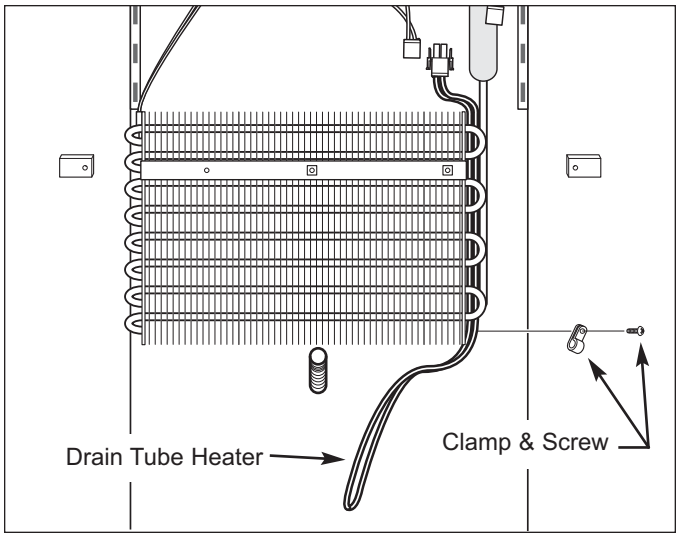

Figure 7-103. Drain Tube Heater

Freezer Evaporator Thermistor (632-3, 642-3, 661-3)

The freezer evaporator thermistor is attached at the top of the left evaporator bracket with a screw.

To remove the evaporator thermistor, remove the freezer shelves, ice bucket, duct/shelf assembly and evaporator cover first, then (See Figures 7-104):

1. Disconnect thermistor electrical leads.

   NOTE: *On newer models the thermistor is hard-wired to the control board, so it will be necessary to cut the thermistor wires to remove it.*
2. Extract screws which secure evaporator to rear wall of freezer compartment.
3. Pull bottom of evaporator up while rotating to the right to gain access to thermistor mounting screw.
4. Extract screw securing thermistor.

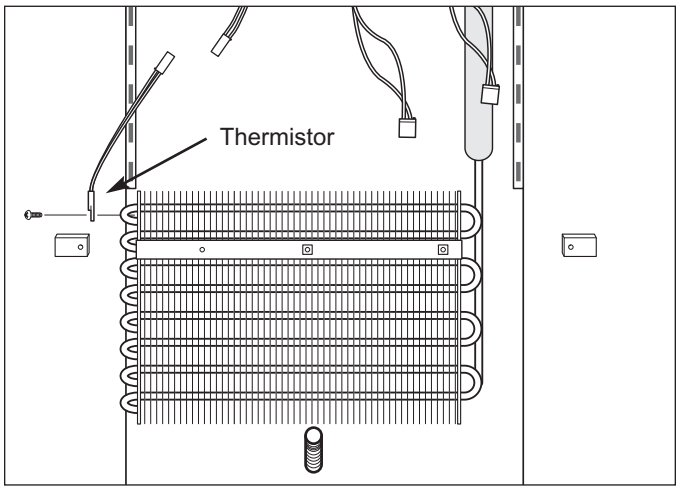

Figure 7-104. Evaporator Thermistor

FREEZER INTERIOR COSMETIC / MECHANICAL (MODELS 685-3, 695-3)

Freezer Door Shelf Assembly Removal / Adjustment (685-3, 695-3)

Removal and adjustment of door shelf assemblies is achieved by sliding the grooves in the end caps over the molded retaining ribs of the door liner.

Lift up and out to remove, push in and down to install (See Figure 7-105).

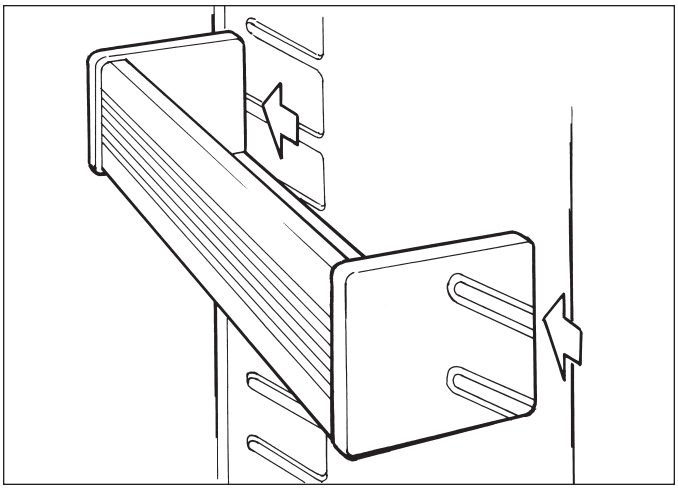

Figure 7-105. Door Shelf

Freezer Compartment Shelf Removal / Adjustment (685-3, 695-3)

Remove and adjust shelf by tilting up at front while lifting the back up and out of the shelf ladders (See Figure 7-106).

To reinstall, tilt front of shelf up and align hooks at back corners with slots in shelf ladders, then insert hooks into slots and lower front of shelf.

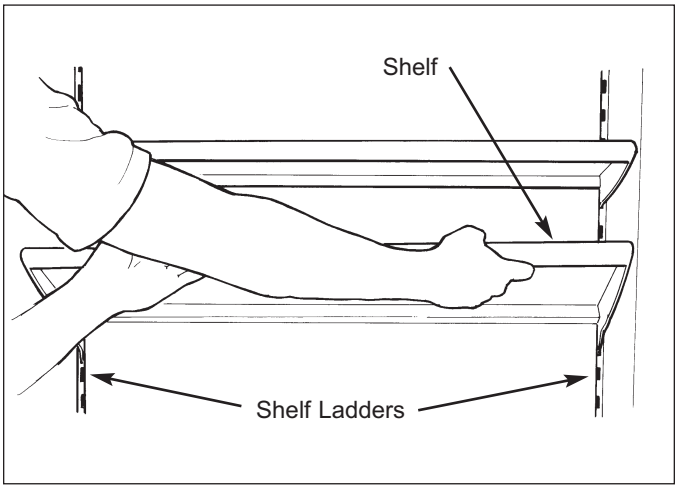

Figure 7-106. Compartment Shelf

Juice Can Rack Assembly (685-3, 695-3)

Hooks at the back of the juice can rack assembly fit into slots in the evaporator front cover.

To remove juice can rack assembly (See Figure 7-106):

1. Lift rack up.
2. Pull rack forward.

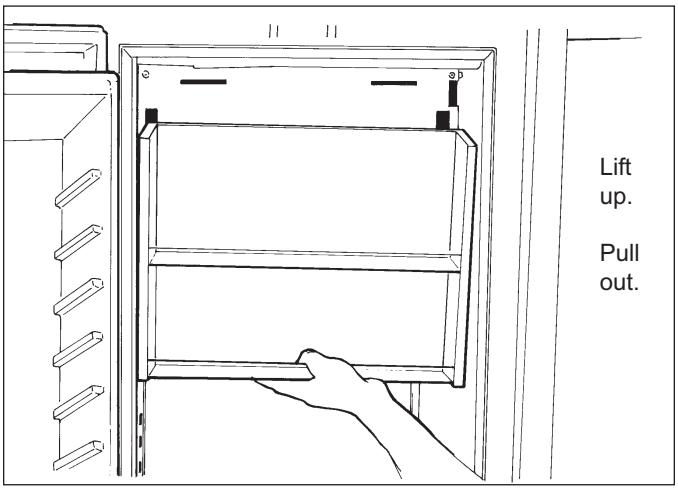

Figure 7-107. Juice Can Rack

Ice Bucket Assembly (685-3, 695-3)

The ice bucket has a flange at the top of each side that rides on the slides that are part of the ice bucket mainframe assembly. When the ice bucket is installed properly, the coupler at the back engages the motor drive yoke to turn the auger and impeller.

To remove the ice bucket assembly, the juice can rack must be removed first, then (See Figure 7-108):

1. Lift front of ice bucket up slightly.
2. Pull ice bucket forward and out.

NOTE: To insure the juice can rack will fit after the ice bucket is installed, the coupler at the back of the ice bucket must engage the motor drive yoke properly.

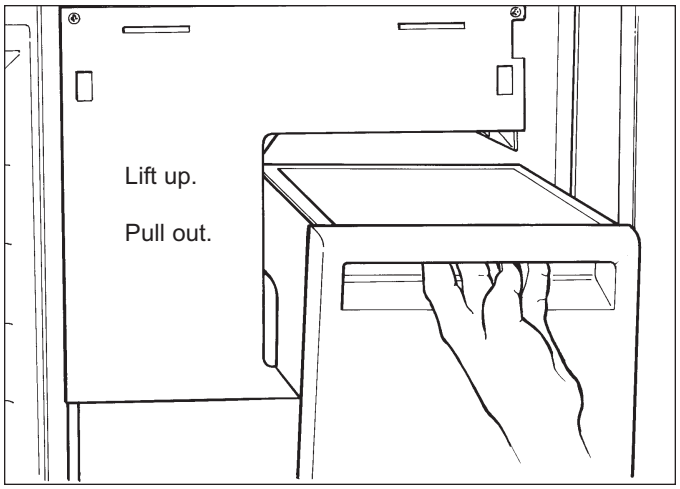

Figure 7-108. Ice Bucket Assembly

Freezer Lower Light Diffuser Glass (685-3, 695-3)

Press the tab to the right of the diffuser glass, then slide the glass to the right (See Figure 7-109).

NOTE: There is no upper light diffuser in the freezer. The light bulbs are located directly behind the upper front panel (See Figure 7-104).

⚠ WARNING

IF BULB SHOULD SEPARATE FROM BASE, DISCONNECT POWER TO UNIT BEFORE ATTEMPTING TO REMOVE BASE.

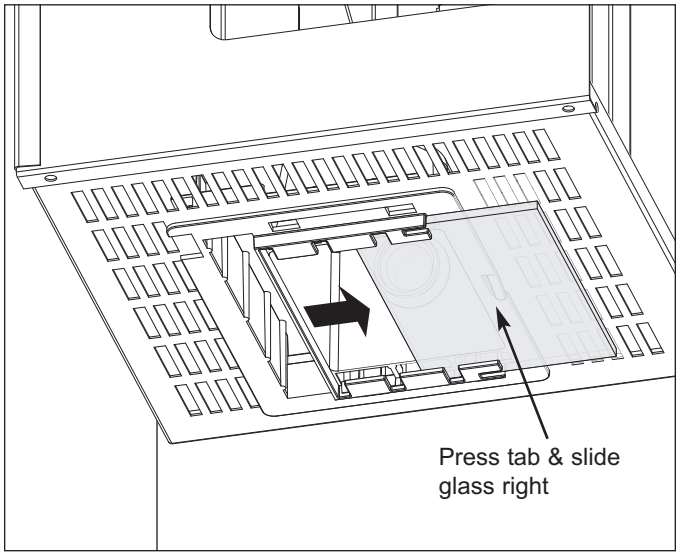

Figure 7-109. Light Diffuser

Freezer Upper Front Panel Assembly (685-3, 695-3)

The upper front panel assembly is secured to the ceiling of a compartment by two rows of screws. The front row (which is hidden) passes through spacers and fit into keyhole slots in the panel assembly. The back row of screws hold the assembly in place.

To remove a upper front panel (See Figure 7-110):

1. Extract back row of screws from panel assembly.
2. Push panel assembly back to line up front row of screws with keyhole slots.
3. Lower panel assembly down and pull out.

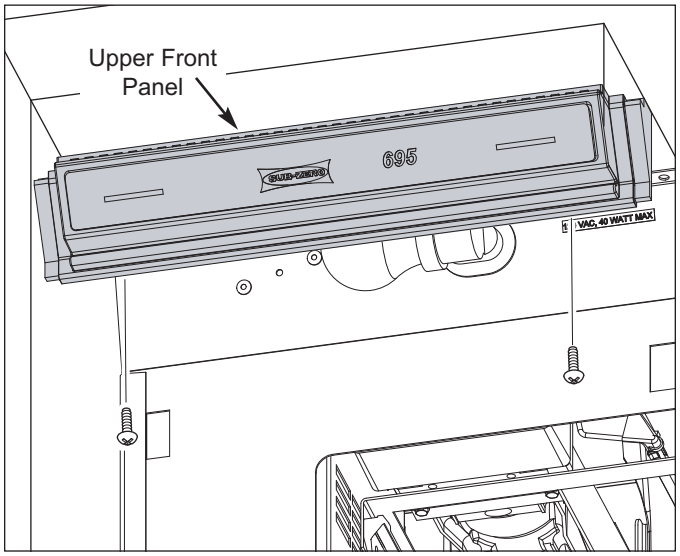

Figure 7-110. Upper Front Panel

Ice Auger Motor Assembly (685-3, 695-3)

The ice auger motor assembly consists of the ice auger motor and two icemaker switches. It is attached to the rear wall with screws, directly behind the ice bucket assembly.

To remove the ice auger motor assembly, the juice can rack and ice bucket must first be removed, then (See Figure 7-111):

1. Extract screws securing ice auger motor assembly to rear wall.
2. Disconnect auger motor and icemaker switches electrical leads, then pull assembly out.

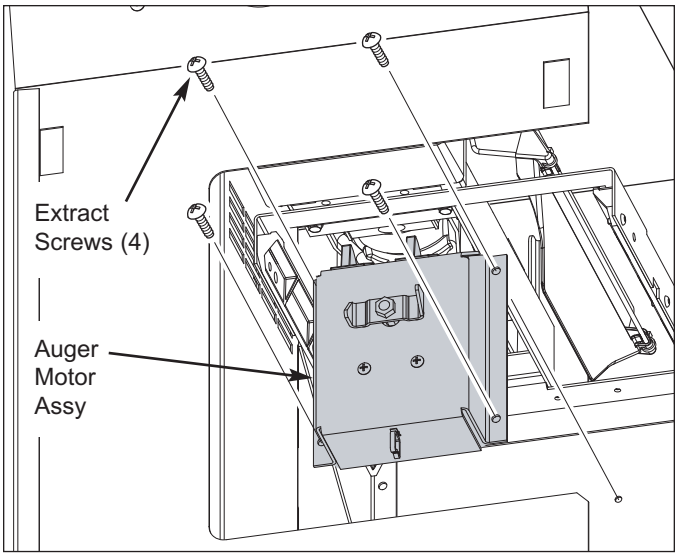

Figure 7-111. Ice Auger Motor

Freezer Evaporator Front Cover/Light Assy (685-3, 695-3)

The freezer evaporator front cover/light assembly is held in place by two screws at top, and two screws through the bottom flange into the lower evaporator cover/light assembly.

To remove the evaporator front/light assembly, the juice can rack must first be removed, then (See Figure 7-112):

1. Extract screws from bottom flange.
2. Extract screws from top flange.
3. Lower evaporator front cover down and disconnect lighting electrical leads.

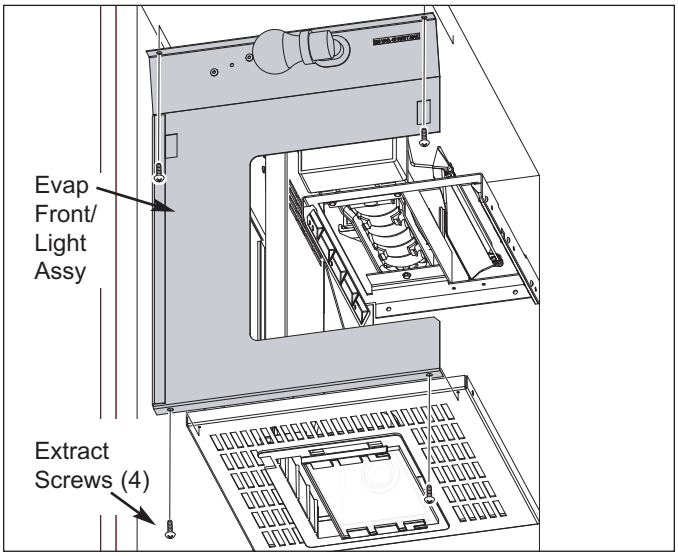

Figure 7-112. Evaporator Front/Light Assembly

Freezer Compartment Thermistor (695-3 only)

NOTE: *The model 685-3 freezer compartment thermistor is located behind the evaporator front cover, just inside the air duct. See "Freezer Compartment Thermistor (685-3)" later in this section.*

The 695-3 freezer compartment thermistor is located on the mullion wall by the icemaker.

To remove the compartment thermistor, the juice can rack, ice bucket and freezer evaporator front cover/light assembly must be removed first, then (See Figure 7-113):

1. Disconnect thermistor electrical leads.

   NOTE: *On newer models the thermistor is hard-wired to the control board, so it will be necessary to cut the thermistor wires to remove it.*
2. Extract screw securing thermistor to wall.

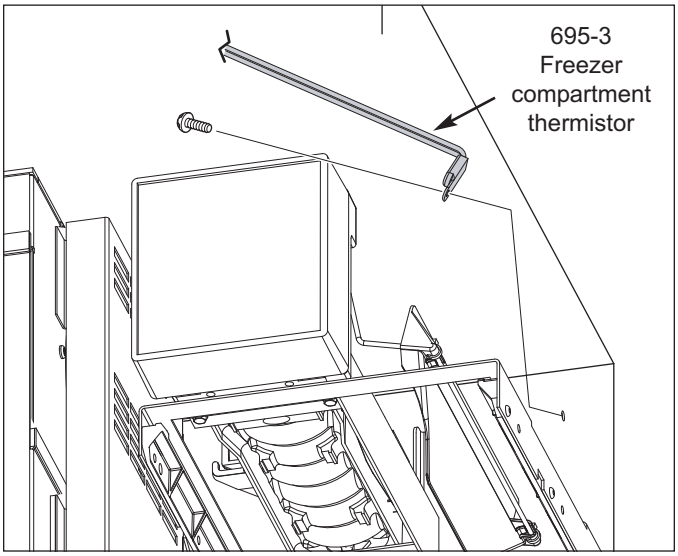

Figure 7-113. 695-3 Compartment Thermistor

Freezer Lower Evaporator Cover/Light Assembly (685-3, 695-3)

The lower evaporator cover/light assembly has two holes at the rear which fit over pegs in the rear wall. Screws toward the front sides of the cover secure the assembly to the side walls.

To remove the lower evaporator cover/light assembly, the evaporator front cover/light assembly must first be removed, then (See Figure 7-114):

1. Extract screws toward front sides of assembly.
2. Disconnect lighting electrical leads.
3. Pull assembly forward.

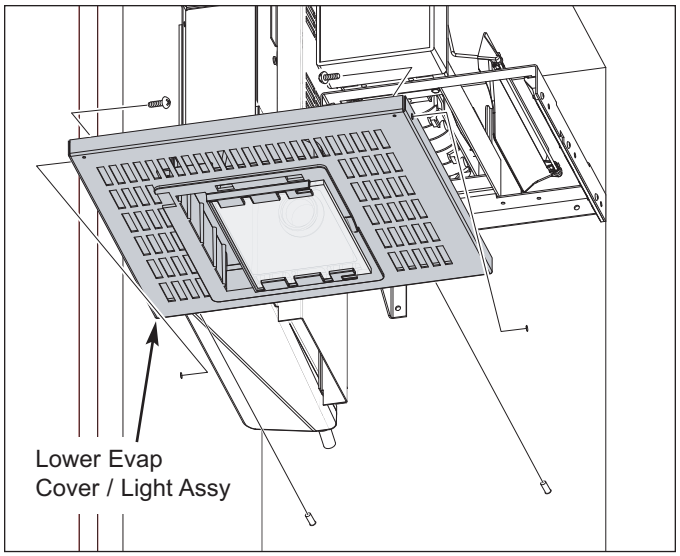

Figure 7-114. Lower Evap Cover/Light Assy

Ice Bucket Mainframe Assembly (685-3, 695-3)

The ice bucket mainframe assembly is secured to the mullion wall and the rear wall with screws.

To remove the ice bucket mainframe assembly, the juice can rack and evaporator front cover/light assembly will need to be removed first, then (See Figure 7-115):

1. Extract mounting screws from rear wall.
2. Extract mounting screws from mullion wall.
3. Pull ice bucket mainframe assembly down slightly and disconnect icemaker electrical leads.

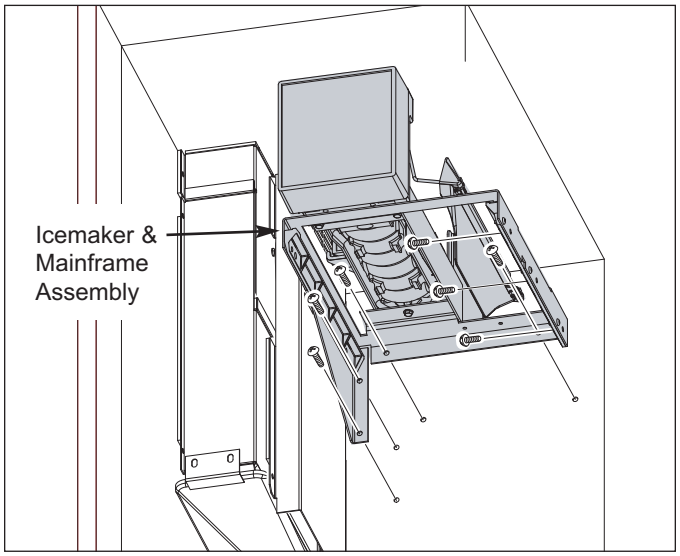

Figure 7-115. Ice Bucket Mainframe Assembly

Icemaker (685-3, 695-3)

The icemaker is attached to the ice bucket mainframe assembly with screws.

To remove the icemaker, the ice bucket mainframe assembly will need to be removed from the freezer section first, then (See Figure 7-116):

1. Extract mounting screw which secure icemaker to ice bucket mainframe assembly.
2. Lift icemaker assembly off of ice bucket mainframe assembly.

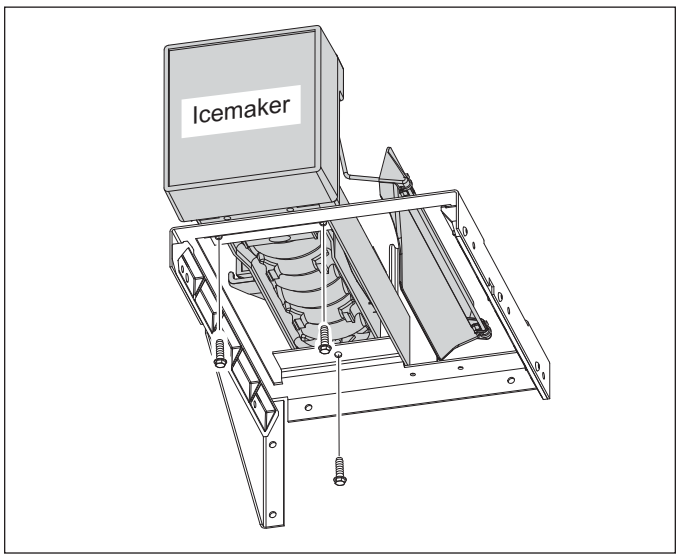

Figure 7-116. Icemaker

Icemaker Fill Tube Heater (685-3, 695-3)

To remove the icemaker fill tube heater, the juice can rack, evaporator front cover/light assembly, and ice bucket mainframe assembly will need to be removed first, then (See Figure 7-117):

1. Disconnect heater electrical leads.
2. Extract retaining screw and clamp (if present).
3. Pull heater and aluminum fill tube extension out as one.

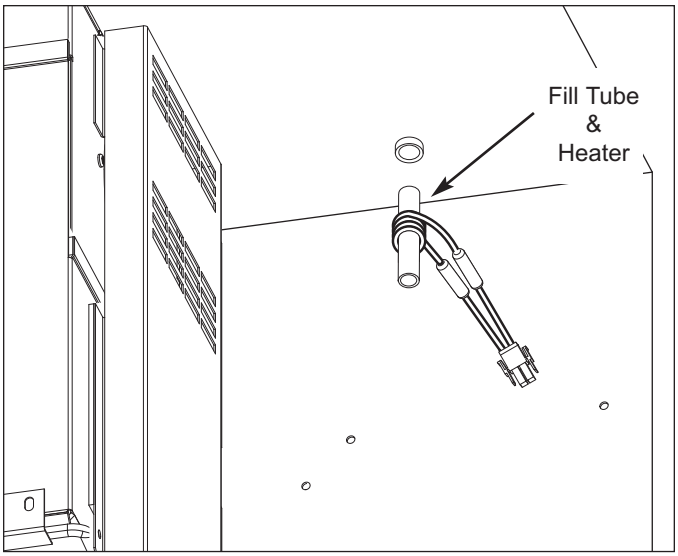

Figure 7-117. Icemaker Fill Tube and Heater

Freezer Fan Cover Assembly (685-3, 695-3)

The freezer fan cover is held in place at the top by clips that are pat of the evaporator fan assembly. At the bottom left of the fan cover, a screw secures it to the evaporator cover assembly.

To remove the freezer fan cover assembly, the juice can rack, evaporator front cover/light assembly, and lower evaporator cover/light assembly will need to be removed first, then (See Figure 7-118):

1. Extract the screw from the bottom left corner.
2. Slide assembly down, out of clips.

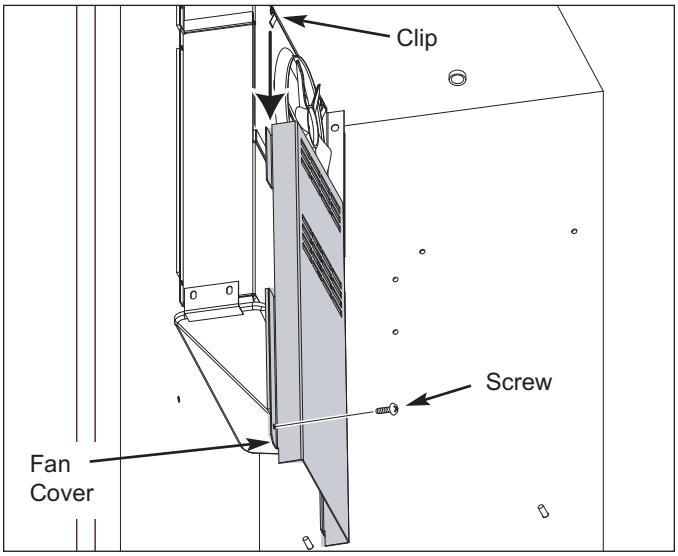

Figure 7-118. Fan Cover

Evaporator Cover Assembly (685-3, 695-3)

The evaporator cover assembly is held to the back and left side wall with screws, and the drain pan support is held to the evaporator cover assembly with screws passing into screw grommets.

To remove the evaporator cover assembly (along with the drain pan support), the juice can rack, evaporator front cover/light assembly, lower evaporator cover/light assembly and freezer fan cover need to be removed first, then (See Figure 7-119):

1. Extract the screws from the back and left side walls.
2. Pull assembly forward.

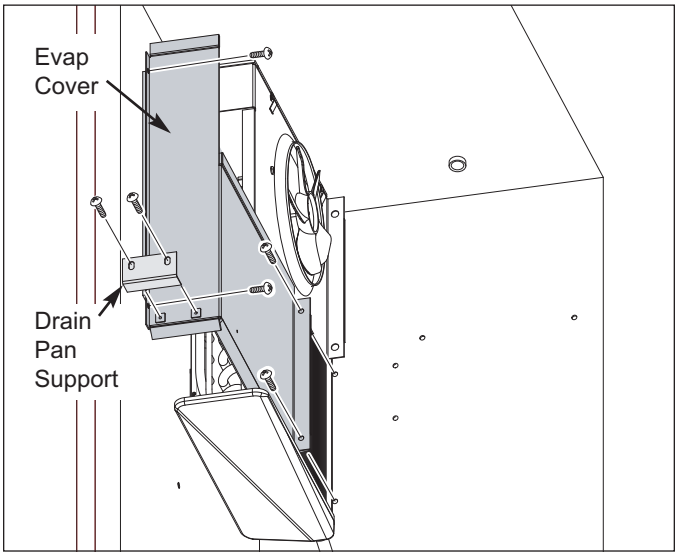

Figure 7-119. Terminator / Bimetal

Freezer Compartment Thermistor (685-3 only)

NOTE: The model 695-3 freezer compartment thermistor is attached to the mullion wall. See "Freezer Compartment Thermistor (695-3)" earlier in this section.

The 685-3 freezer compartment thermistor is behind the evaporator cover assembly, inside the air duct.

To remove the compartment thermistor, the juice can rack, evaporator front cover/light assembly, lower evaporator cover/light assembly, freezer fan cover, and evaporator cover assembly must be removed first, then (See Figure 7-120):

1. Disconnect thermistor electrical leads.
   NOTE: On newer models the thermistor is hard-wired to the control board, so it will be necessary to cut the thermistor wires to remove it.
2. Pull thermistor up out of duct.

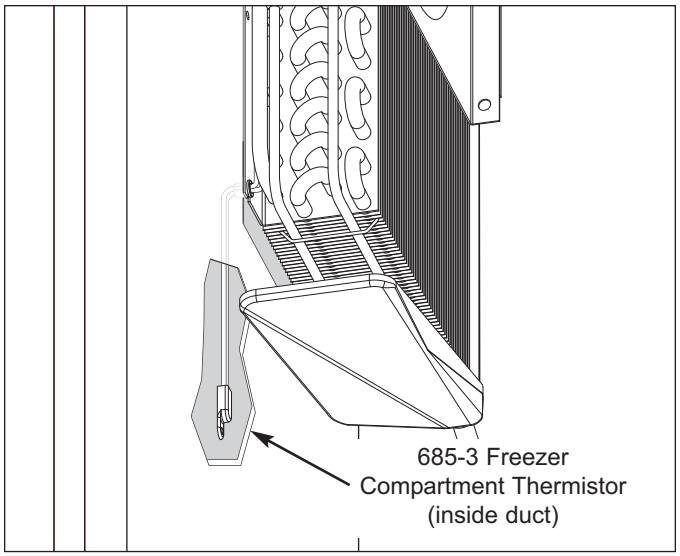

Figure 7-120. 685-3 Compartment Thermistor

Freezer Evaporator Thermistor (685-3, 695-3)

The freezer evaporator thermistor is attached to the front evaporator bracket with a screw.

To remove the freezer evaporator thermistor, the juice can rack, evaporator front cover/light assembly, lower evaporator cover/light assembly, freezer fan cover, and evaporator cover assembly will need to be removed first, then (See Figure 7-121):

1. Disconnect thermistor electrical leads.
   NOTE: On newer models the thermistor is hard-wired to the control board, so it will be necessary to cut the thermistor wires to remove it.
2. Extract screw securing thermistor to evaporator bracket.

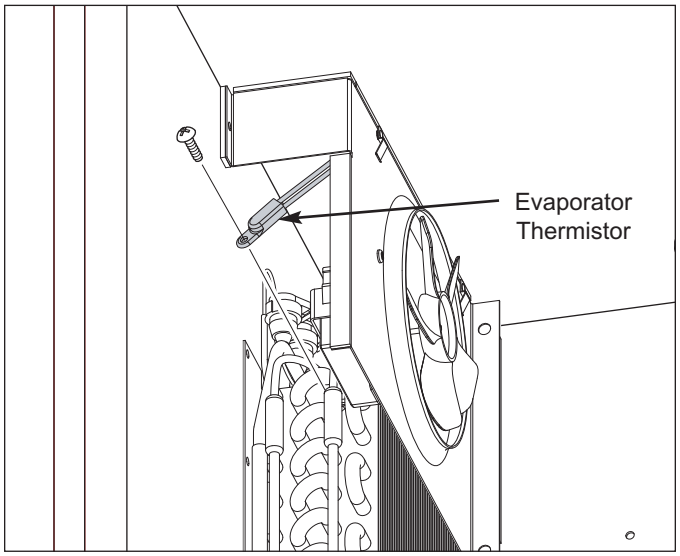

Figure 7-121. Evaporator Thermistor

Defrost Terminator & Fan Delay Bimetal (685-3, 695-3)

The defrost terminator and fan delay bimetal are attached to the evaporator outlet.

To remove the defrost terminator and fan delay bimetal, the juice can rack, evaporator front cover/light assembly, lower evaporator cover/light assembly, freezer fan cover, and evaporator cover assembly will need to be removed first, then (See Figure 7-122):

1. Disconnect terminator, or bimetal electrical leads.
2. Pull terminator, or bimetal off of tubing.

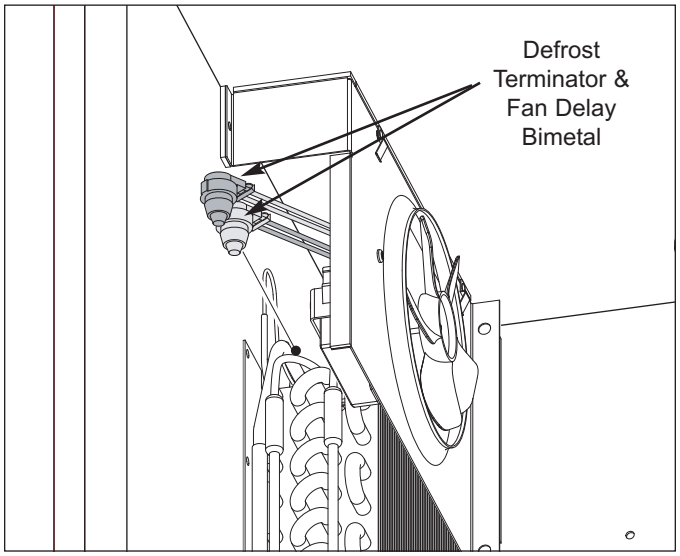

Figure 7-122. Terminator & Fan Delay Bimetal

Evaporator Defrost Heater (685-3, 695-3)

The defrost heater sits under the evaporator, fitting into a slot at bottom of the evaporator back bracket, with a heater clip holding the other end of the heater.

To remove the defrost heater, the juice can rack, evaporator front cover/light assembly, lower evaporator cover/light assembly, freezer fan cover, and evaporator cover assembly will need to be removed first, then (See Figure 7-123):

1. Disconnect heater wire leads from wire harness.
2. Pull defrost heater toward front of unit.

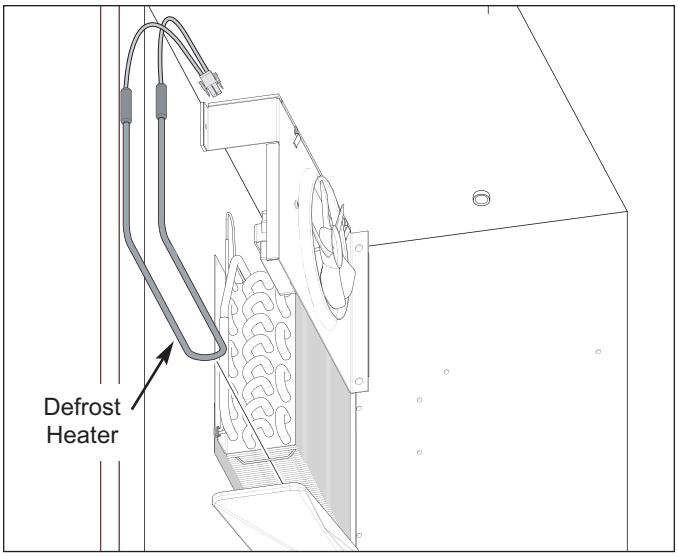

Figure 7-123. Defrost Heater

Freezer Evaporator Fan Assembly (685-3, 695-3)

Holes in the back flange of the freezer evaporator fan assembly fit over pegs in the back wall. A screw through the front flange holds the assembly to the left wall.

To remove the evaporator fan assembly, the juice can rack, evaporator front cover/light assembly, lower evaporator cover/light assembly, freezer fan cover, and evaporator cover assembly will need to be removed first, then (See Figure 7-124):

1. Extract the screws from the back and left side walls.
2. Pull assembly forward.

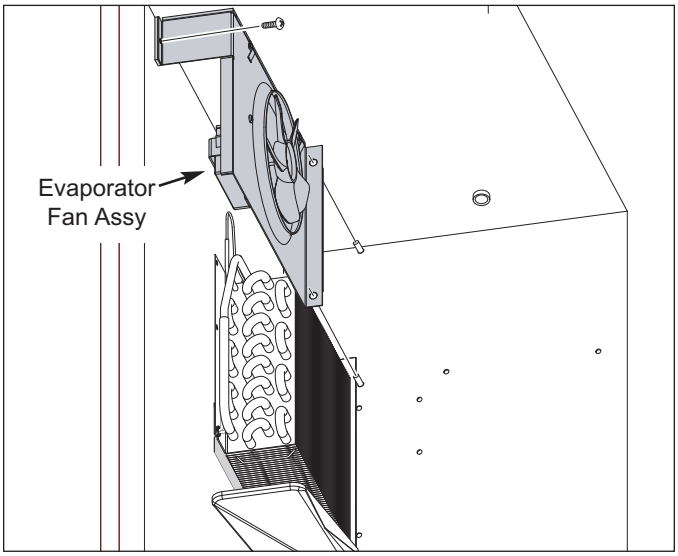

Figure 7-124. Evaporator Fan Assembly

Freezer Drain Pan and Drain Tube Heat Conductor (685-3, 695-3)

The drain tube heat conductor is riveted to the bottom of the evaporator back bracket, and protrudes into the drain pan spout. The support, attached to the evaporator cover assembly, holds the drain pan front in place.

To remove the drain pan, the juice can rack, evaporator front cover/light assembly, lower evaporator cover/light assembly, freezer fan cover, evaporator cover assembly and evaporator fan assembly will need to be removed first, then (See Figure 7-125):

1. Extract screws securing evaporator to wall.
2. Pull evaporator assembly forward and up, until drain tube heat conductor clears drain pan spout.
3. Pull drain pan forward.

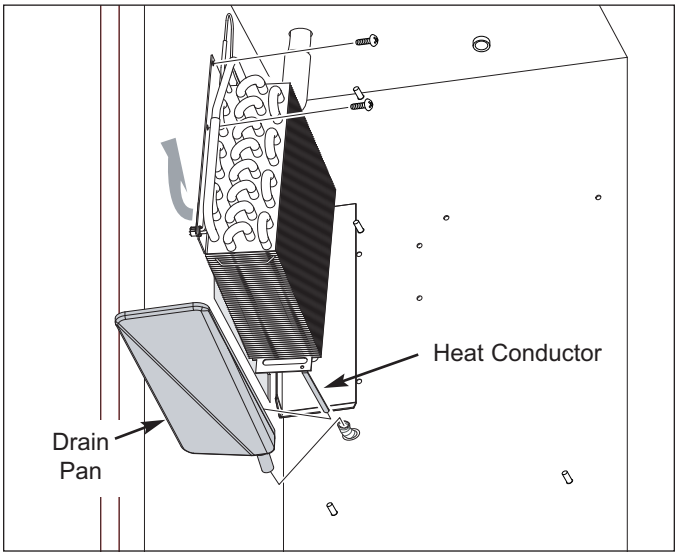

Figure 7-125. Terminator & Fan Delay Bimetal

LOWER COMPRESSOR AREA MECHANICAL (MODELS 601R-3, 601RG-3, 601F-3)

Water Valve (601F-3)

NOTE: Models **611-3, 611G-3, 632-3, 642-3, 650-3, 650G-3, 661-3. 685-3 and 695-3** *water valve removal instructions are covered in "EXTERIOR COSMETIC / MECHANICAL (ALL MODELS EXCEPT 601'S)" earlier in this section.*

The water valve is mounted to a bracket in the compressor area.

To remove a water valve, first remove the lower grille section, then (See Figure 7-126):

1. Loosen mounting screw which holds water valve to bracket.
2. Lift valve until screw head aligns with large section of key-hole slot.
3. Push valve back until screw head clears bracket, then lower valve and pull forward.
4. Disconnect electrical leads from valve.
5. Disconnect water lines from valve.

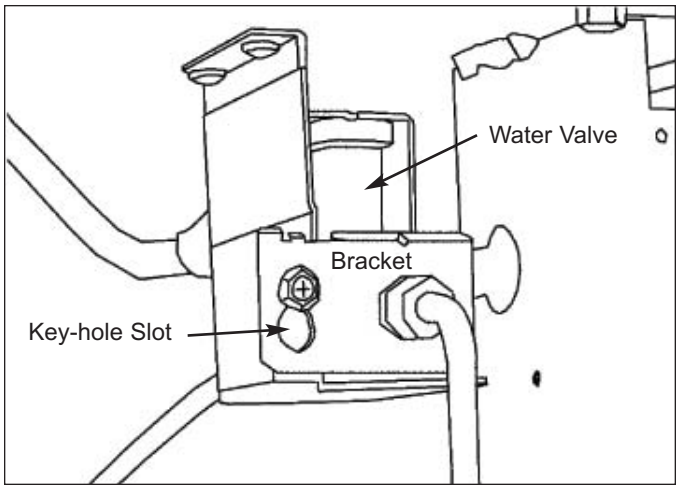

Figure 7-126. Water Valve

Condenser Fan (601R-3, 601RG-3, 601F-3)

The condenser fan is mounted to the condenser fan shroud with three fan mounting brackets that are hooked into grommeted holes in the fan shroud. Screws passing through these brackets secure the fan motor to the brackets. The condenser fan blade is held onto the fan motor shaft with a nut.

To remove the condenser fan, first remove the grille, then (See Figure 7-127):

1. Extract screws securing motor to brackets.

   NOTE: Brackets will unhook from grommeted holes in condenser fan shroud after screws are removed.
2. To remove fan blade from fan motor:
   a. Grab blade and motor while turning nut counterclockwise.
   b. Then pull the blade from the motor shaft.

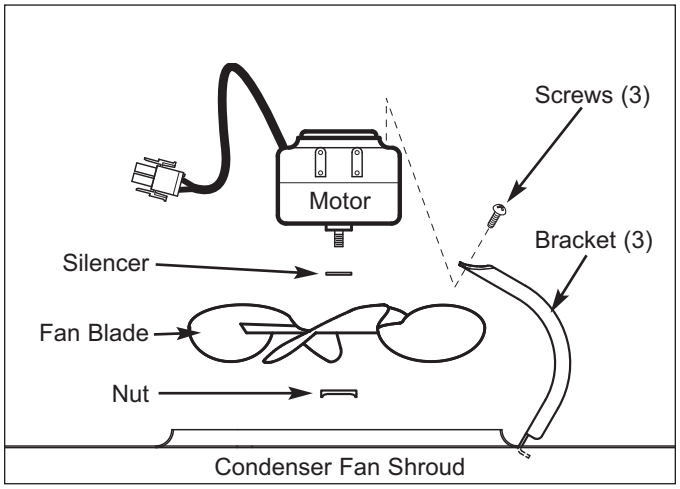

Figure 7-127. Condense Fan

UPPER COMPRESSOR AREA MECHANICAL (ALL MODELS EXCEPT 601'S)

Condenser Fan (All Models except 601's)

The condenser fan is mounted to the condenser fan shroud with three fan mounting brackets that are hooked into grommeted holes in the fan shroud. Screws passing through these brackets secure the fan motor to the brackets. The condenser fan blade is held onto the fan motor shaft with a nut.

To remove the condenser fan, first remove the grille, then (See Figure 7-128):

1. Extract screws securing motor to brackets.

   NOTE: *Brackets will unhook from grommeted holes in condenser fan shroud after screws are removed.*

2. To remove fan blade from fan motor:
   a. Grab blade and motor while turning nut counterclockwise.
   b. Then pull the blade from the motor shaft.

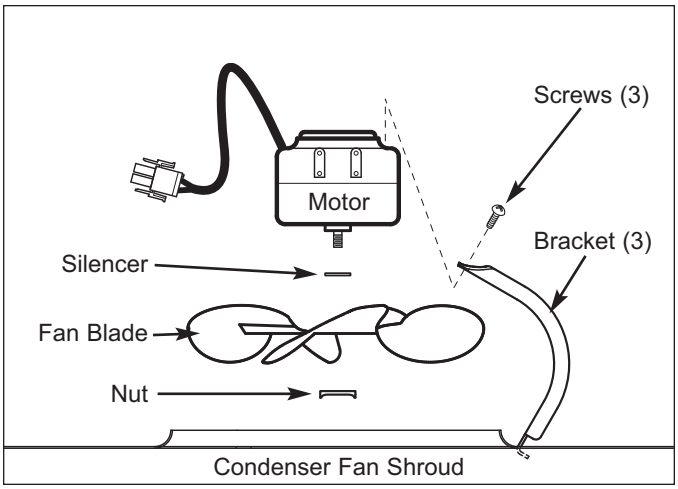

Figure 7-128. Condense Fan

SEALED SYSTEM (MODELS 601R-3, 601RG-3, 601F-3)

Filter-Drier (601R-3, 601RG-3, 601F-3)

The filter-drier is attached to the condenser outlet and secured to the condenser with a cable tie.

After capturing the refrigerant from sealed system, (See Figure 7-129):

1. Cut cable tie.
2. With a file, score a line around capillary tube 1” or less from drier outlet, then fatigue capillary tube at this line until it separates.
3. With a tube-cutter, cut inlet tube 1” or less from drier inlet.

NOTE: *It is not recommended to sweat tubing apart. Doing so will induce moisture into the sealed system.*

NOTE: *After capillary tube separates, check tubing for internal burrs. If burrs exist, repeat step 2 above.*

NOTE: *When installing replacement filter-drier, insert capillary tube until it touches screen inside drier, then pull capillary tube away from screen approximately 3/8" (9.5 mm) before brazing (See Figure 7-130).*

NOTE: *Filter-drier outlet must be facing downward in order to function properly.*

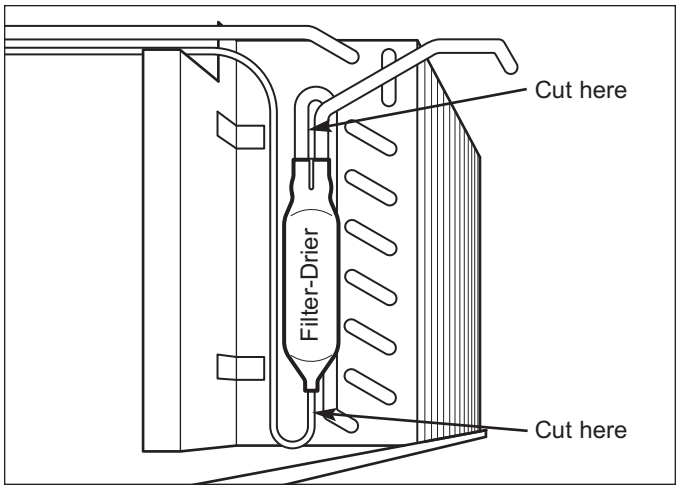

Figure 7-129. Filter-Drier

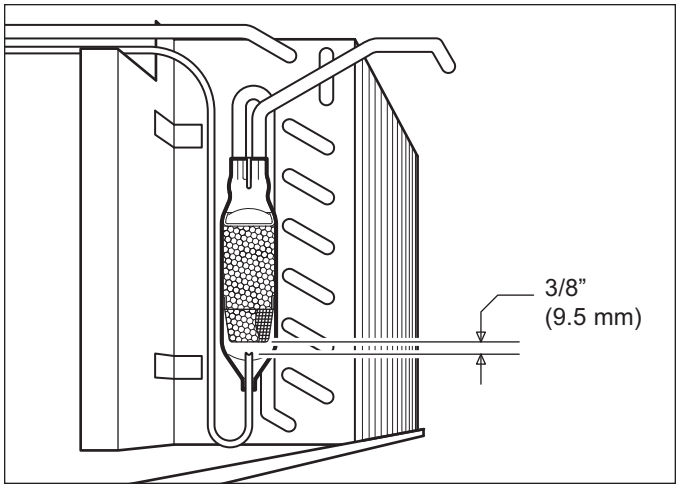

Figure 7-130. Filter-Drier Cut-Away View

Compressor (601R-3, 601RG-3, 601F-3)

The Compressor is secured to the unit tray by bolts into grommets.

NOTE: *When replacing a compressor, the filter-drier must also be replaced.*

After capturing the refrigerant from sealed system, (See Figure 7-131):

1. Remove compressor electrical cover and disconnect electricals from compressor.
2. Extract bolts from grommets at each corner of compressor base.
3. Pull compressor forward and rotate to the right to gain access to suction and discharge lines.
4. Using a tube cutter, cut suction and discharge lines approximately 1” from compressor.

NOTE: *It is not recommended to sweat tubing apart. Doing so will induce moisture into the sealed system.*

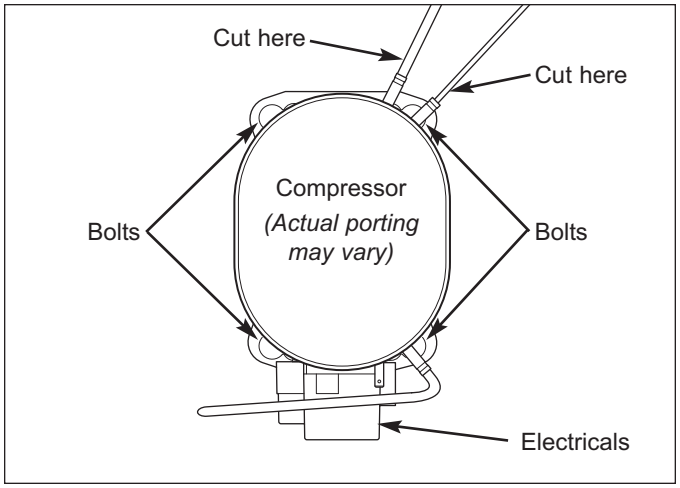

Figure 7-131. Compressor Top View

Drain Pan Condensate Heater Loop (601R-3, 601RG-3)

The drain pan condensate heater loop is located in the compressor area, and sits in the drain pan.

NOTE: *When replacing a condensate heater loop, the filter-drier must also be replaced.*

NOTE: *It is recommended that a suction line drier be added to the sealed system when replacing the condensate heater loop.*

After capturing the refrigerant from sealed system, (See Figure 7-132):

1. Extract bolts from grommets at each corner of compressor base.
2. Pull compressor forward and rotate to gain access to condensate heater tubing.
3. Using a tube cutter, cut condensate loop inlet and outlet.

NOTE: *It is not recommended to sweat tubing apart. Doing so will induce moisture into the sealed system.*

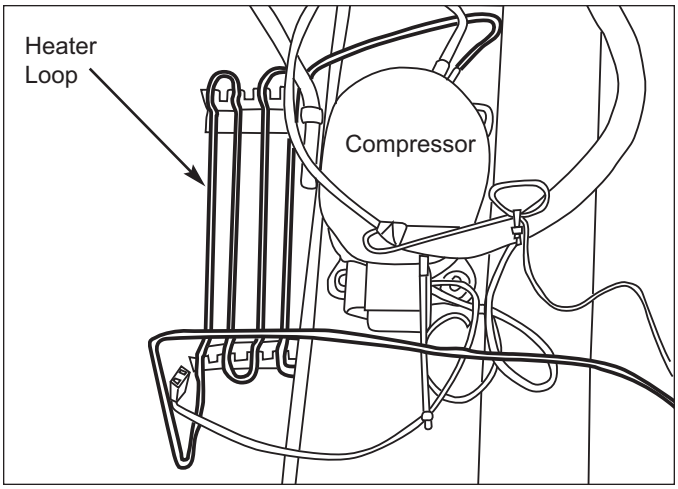

Figure 7-132. Drain Pan Condensate Heater Loop

Condenser (601R-3, 601RG-3, 601F-3)

NOTE: *When replacing the condenser, the filter-drier must also be replaced.*

After capturing the refrigerant from sealed system, (See Figure 7-133):

1. Extract screws which hold condenser fan shroud to condenser.
2. Using a tube cutter, cut condenser inlet and outlet.
   NOTE: *It is not recommended to sweat tubing apart. Doing so will induce moisture into the sealed system.*
3. Extract condenser mounting screws which hold condenser side brackets to unit tray.
4. Slide condenser to the right, then pull forward.

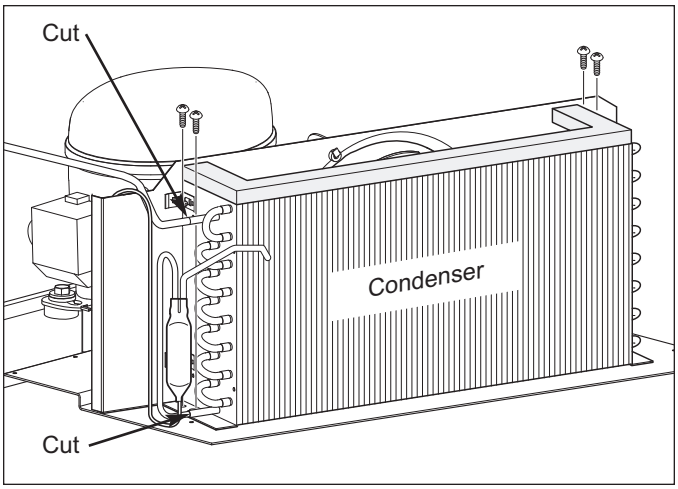

Figure 7-133. Condenser

Evaporator (601R-3, 601RG-3, 601F-3)

The evaporator is attached to the rear wall with screws, behind the evaporator cover.

NOTE: *When replacing an evaporator, the filter-drier must also be replaced.*

NOTE: *When removing a 601F-3 evaporator, the evaporator thermistor, defrost terminator and defrost heater must also be removed and reused on new evaporator.*

After capturing the refrigerant from the sealed system (See Figure 7-134):

1. Extract screws which hold evaporator to rear wall.
2. Pull bottom of evaporator up and rotate heat exchanger out.
3. With a file, score a line around capillary tube, 1” or less from evaporator inlet, then fatigue capillary tube at this line until it separates.
4. With a tube-cutter, cut evaporator outlet 1” or less from accumulator (if applicable), or 1” or less from suction line connection point.

NOTE: *It is not recommended to sweat tubing apart. Doing so will induce moisture into the sealed system.*

NOTE: *After capillary tube is fatigue until it separates, check tubing for internal burrs. If burrs exist, repeat step 3 above.*

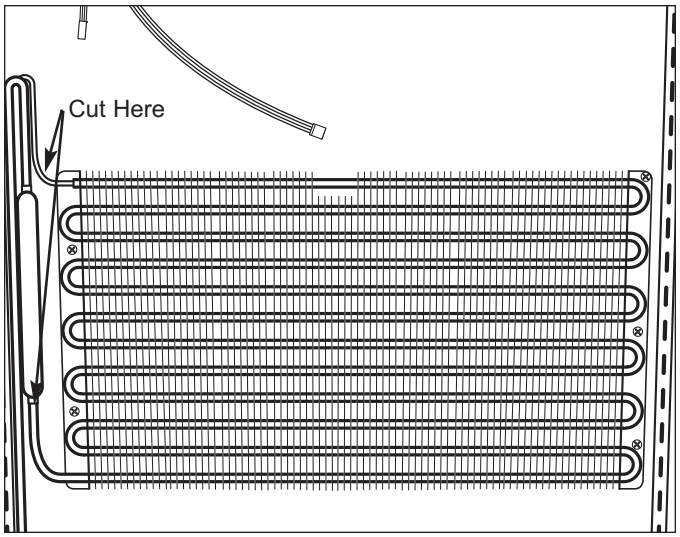

Figure 7-134. Evaporator

Heat Exchanger (601R-3, 601RG-3, 601F-3)

NOTE: *When replacing a heat exchanger, the filter-drier must also be replaced.*

NOTE: *It is not necessary to pull the unit from its installation in order to replace a heat exchanger. The heat exchanger travels through tubing channel which is foamed into the rear wall of the unit.*

After capturing the refrigerant from the sealed system (See Figures 7-135, 7-136 and 7-137):

1. Extract screws which hold evaporator to rear wall.
2. Pull bottom of evaporator up and rotate heat exchanger out.
3. With a file, score a line around capillary tube, 1” or less from evaporator inlet, then fatigue capillary tube at this line until it separates.
4. With a tube-cutter, cut evaporator outlet 1” or less from accumulator (if applicable), or 1” or less from suction line connection point.
5. With a tin snips, or similar tool, cut heat exchanger in compartment as close to tubing channel as possible.
6. In lower compressor area, use a tube-cutter to cut drier from condenser.
7. Extract bolts from grommets at each corner of compressor base.
8. Pull compressor forward and rotate to gain access to suction line.
9. Using a tube cutter, cut suction line approximately 1” from compressor.
10. Pull remaining heat exchanger from tubing channel.

NOTE: *It is not recommended to sweat tubing apart. Doing so will induce moisture into the sealed system.*

NOTE: *When replacing the heat exchanger, it is recommended to attach it at the evaporator end first, then feed heat exchanger down through the tubing channel.*

NOTE: *After heat exchanger is installed, the tubing channel must be sealed closed with silicone.*

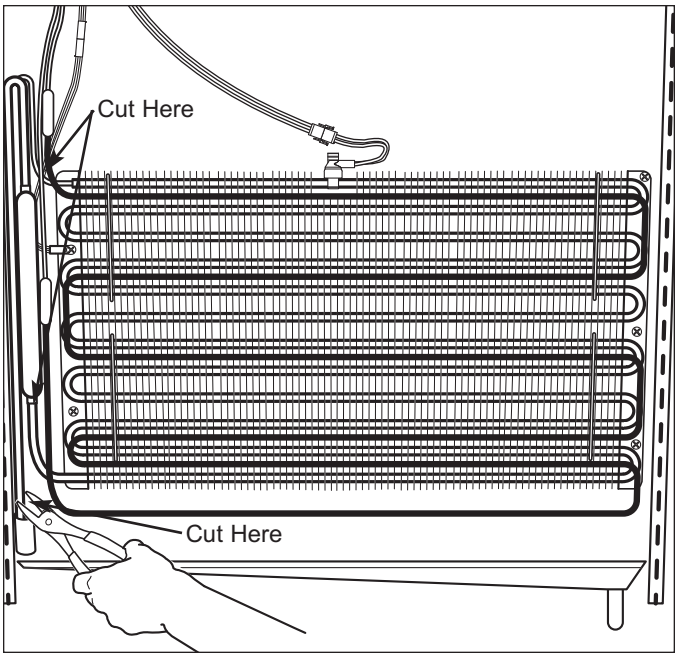

Figure 7-135. Heat Exchanger

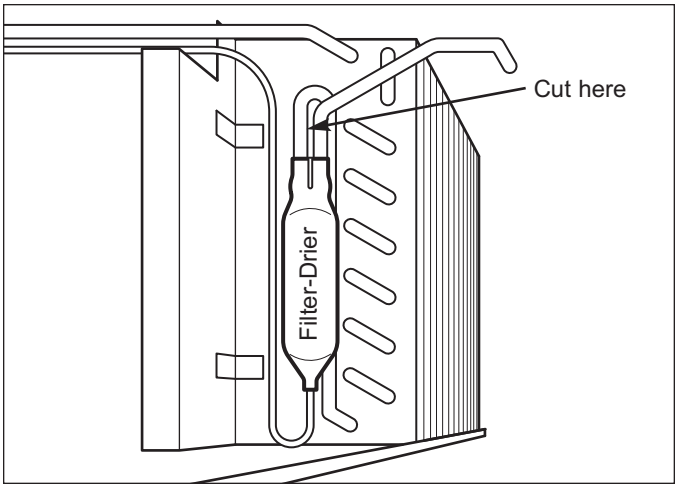

Figure 7-136. Filter-Drier

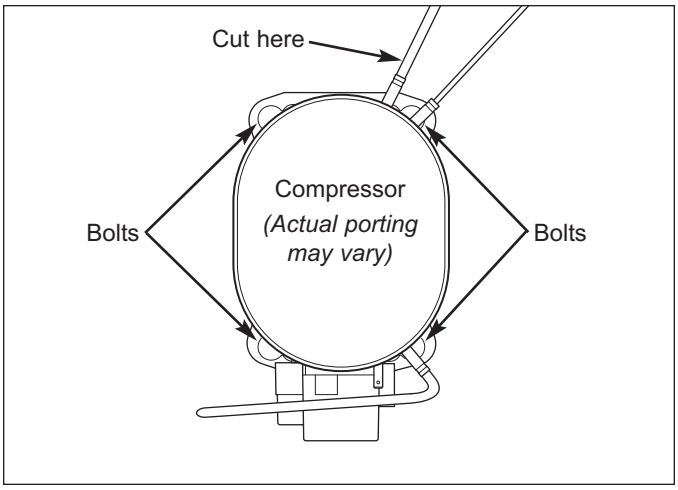

Figure 7-137. Compressor Top View

SEALED SYSTEM (ALL MODELS EXCEPT 601'S)

Filter-Drier (All Models except 601's)

The filter-drier is attached to to a drier bracket in the compressor area by a cable tie.

After capturing the refrigerant from sealed system, (See Figure 7-138):

1. Cut Cable tie.
2. With a file, score a line around capillary tube 1" or less from drier inlet, then fatigue capillary tube at this line until it separates.
3. With a tube-cutter, cut inlet tube 1" or less from drier inlet.

NOTE: *It is not recommended to sweat tubing apart. Doing so will induce moisture into the sealed system.*

NOTE: *After capillary tube separates, check tubing for internal burrs. If burrs exist, repeat step 2 above.*

NOTE: *When installing replacement filter-drier, insert capillary tube until it touches screen inside drier, then pull capillary tube away from screen approximately 3/8" before brazing.* (See Figure 7-139).

NOTE: *Filter-drier outlet must be facing downward in order to function properly.*

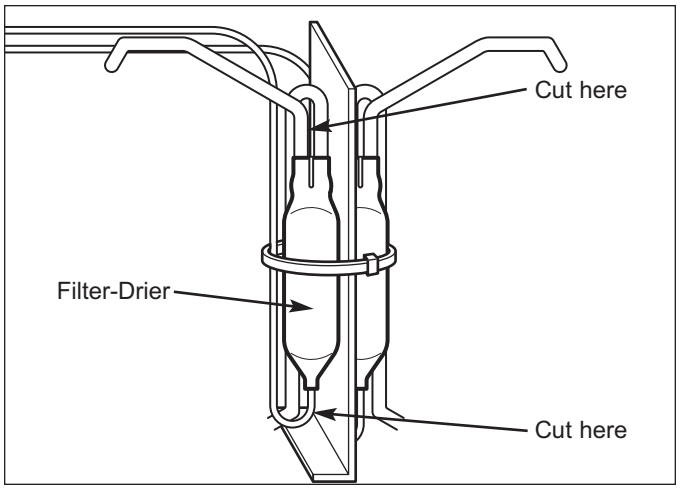

Figure 7-138. Filter-Drier

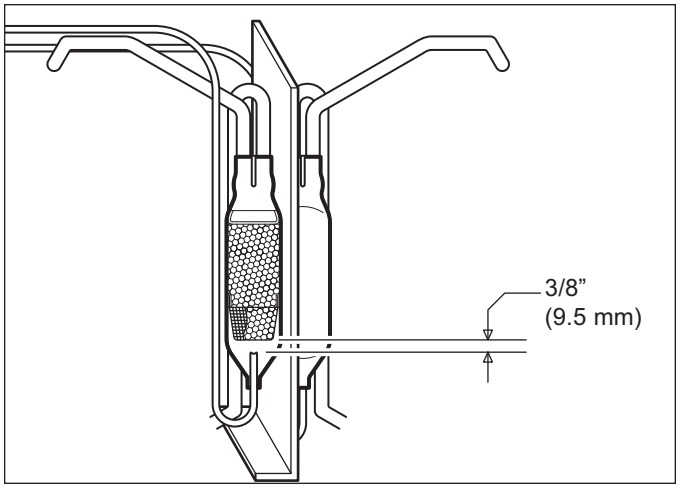

Figure 7-139. Filter-Drier Cut-Away View

Compressor (All Models except 601's)

Compressors are secured to the top of the unit with nuts over stud-bolts. The left compressor is for the freezer, the right is the refrigerator compressor.

NOTE: *When replacing a compressor, the filter-drier must also be replaced.*

After capturing the refrigerant from sealed system, (See Figure 7-140):

1. Remove compressor electrical cover and disconnect electricals from compressor.
2. Extract nuts from stud-bolts at each corner of compressor base.
3. Lift compressor up and pull forward to gain access to suction and discharge lines.
4. Using a tube cutter, cut suction and discharge lines approximately 1" from compressor.

NOTE: *It is not recommended to sweat tubing apart. Doing so will induce moisture into the sealed system.*

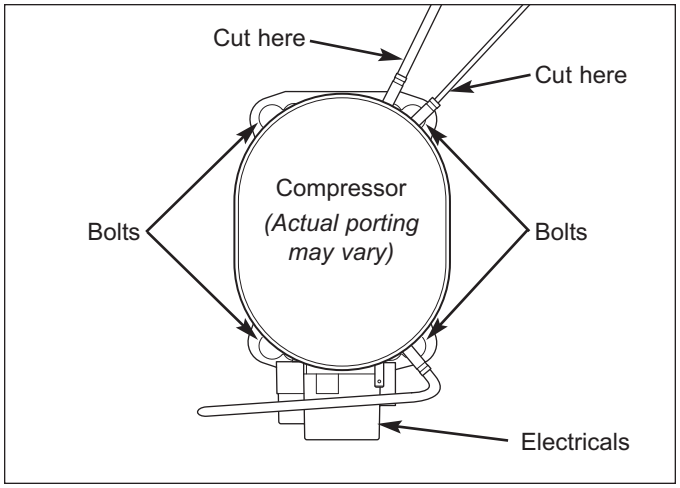

Figure 7-140. Compressor Top View

Condenser (All Models except 601's)

NOTE: *When replacing the condenser, both filter-driers must also be replaced.*

NOTE: *It is necessary to pull the unit from its installation and remove the unit shroud in order to replace a condenser.*

After capturing the refrigerant from sealed system, (See Figure 7-141):

1. Extract screws which hold condenser fan shroud to condenser.
2. Using a tube cutter, cut condenser inlet and outlet.
   NOTE: *It is not recommended to sweat tubing apart. Doing so will induce moisture into the sealed system.*
3. Extract condenser mounting screws which hold condenser side brackets to top of unit.
4. Lift condenser off of unit

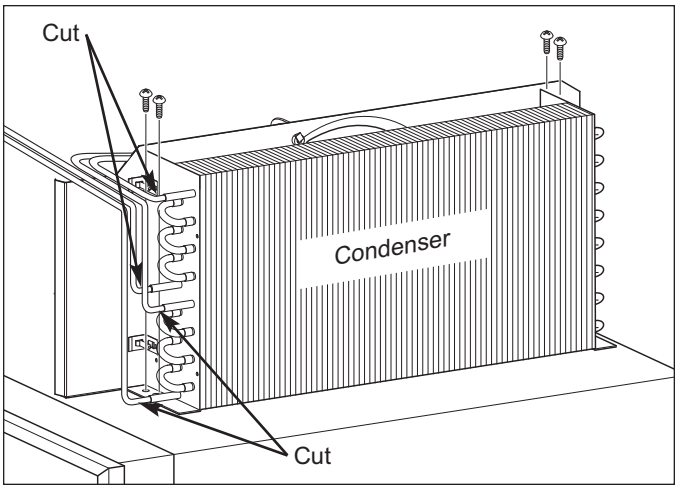

Figure 7-141. Condenser

Evaporator (All Models except 601's)

Evaporators are attached to rear walls, or ceilings with screws, behind evaporator covers.

NOTE: *When replacing an evaporator, the filter-drier must also be replaced.*

NOTE: *When removing a freezer evaporator, the evaporator thermistor, defrost terminator and defrost heater must also be removed and reused on new evaporator.*

After capturing the refrigerant from the sealed system (See Figure 7-142):

1. Extract screws which hold evaporator to rear wall or ceiling of compartment.
2. Pull and rotate evaporator so heat exchanger is accessible.
3. With a file, score a line around capillary tube, 1" or less from evaporator inlet, then fatigue capillary tube at this line until it separates.
4. With a tube-cutter, cut evaporator outlet 1" or less from accumulator (if applicable), or 1" or less from suction line connection point.

NOTE: *It is not recommended to sweat tubing apart. Doing so will induce moisture into the sealed system.*

NOTE: *After capillary tube is fatigue until it separates, check tubing for internal burrs. If burrs exist, repeat step 3 above..*

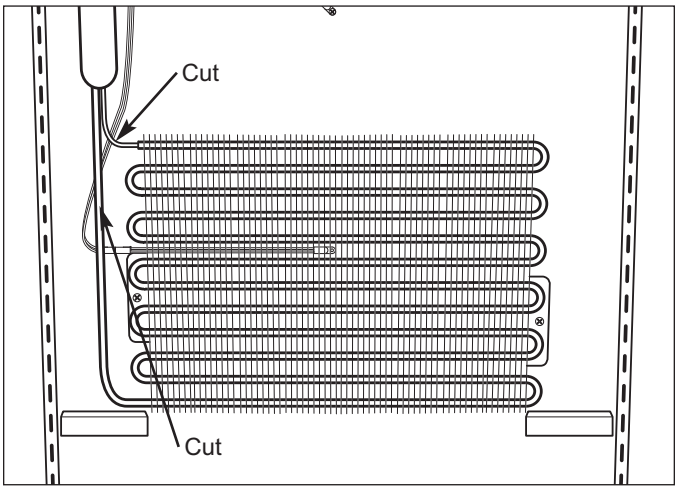

Figure 7-142. Refrigerator Evaporator

NOTE: *Freezer evaporator removal not illustrated.*

Heat Exchanger (All Models except 601's)

NOTE: *When replacing a heat exchanger, the filter-drier must also be replaced.*

NOTE: *It is necessary to pull a model 611-3, 611G-3, 650-3 and 650G-3 from its its installation in order to replace a freezer heat exchanger. For all other models, it is not necessary to the unit from its installation in order to replace a freezer heat exchanger.*

After capturing the refrigerant from the sealed system (See Figures 7-143, 7-144, 7-145):

1. Extract screws which hold evaporator.
2. Pull and rotate evaporator so heat exchanger is accessible.
3. With a file, score a line around capillary tube, 1" or less from evaporator inlet, then fatigue capillary tube at this line until it separates.
4. With a tube-cutter, cut evaporator outlet 1" or less from accumulator (if applicable), or 1" or less from suction line connection point.
5. With a tin snips, or similar tool, cut heat exchanger in compartment as close as possible to wall or ceiling where heat exchanger passes through.
6. In upper compressor area, use a tube-cutter to cut drier from condenser.
7. Extract nuts from stud-bolts at each corner of compressor base.
8. Lift compressor up and pull forward to gain access to suction line.
8. Using a tube cutter, cut suction line approximately 1" from compressor.
9. Pull remaining heat exchanger from unit.

NOTE: *It is not recommended to sweat tubing apart. Doing so will induce moisture into the sealed system.*

NOTE: *When replacing the heat exchanger, it is recommended to attach it at the evaporator end first, then feed the heat exchanger through hole, up to compressor area.*

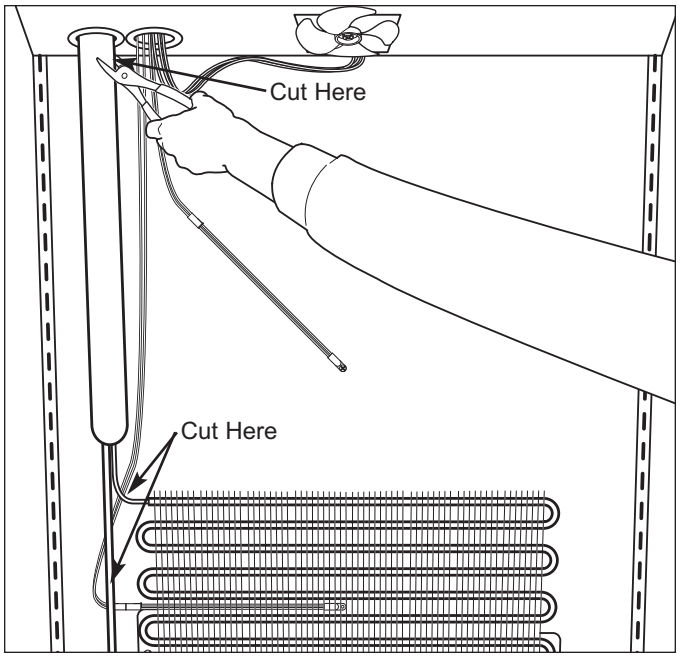

Figure 7-143. Heat Exchanger

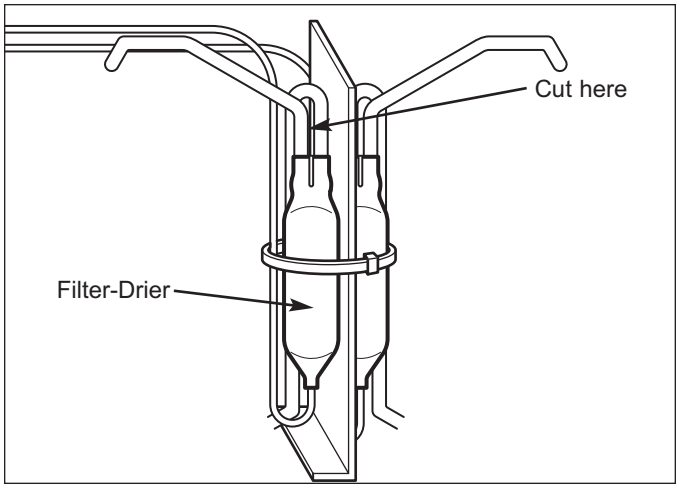

Figure 7-144. Filter-Drier

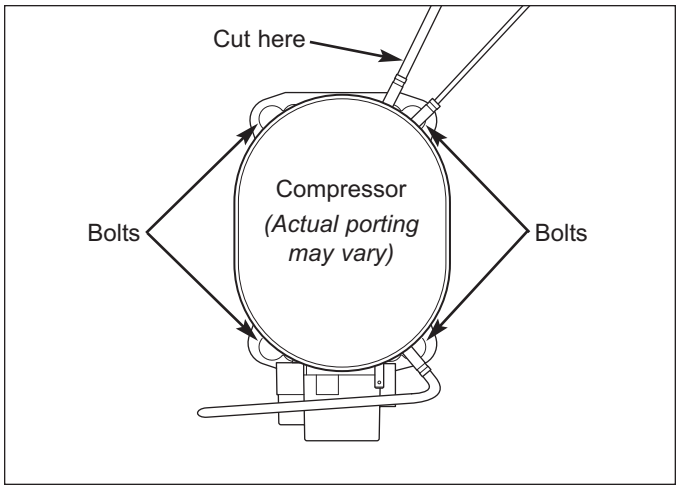

Figure 7-145. Compressor Top View

TROUBLESHOOTING GUIDES

This section of the manual contains:

- The Error Code Table and the Error Code Troubleshooting Guide.
- The General Troubleshooting Guide, which covers all problems that a 600-3 Series unit may experience.
- The Sealed System Diagnostic Tables.
- The Membrane Switch/Ribbon Cable Test Procedures, used to determine if a control panel assembly is defective.

HOW TO USE ERROR CODE TROUBLESHOOTING GUIDE

Error Codes indicate problems registered by specific components. If error codes are registered, they will appear before temperature readings while in Diagnostic Mode.

NOTE: *If Error Codes appear with a flashing "SERVICE" indicator prior to initiating Diagnostic Mode, the unit experienced temperature problems that may or may not be associated with the Error Codes displayed.*

To initiate Diagnostic Mode, press and hold either COLDER key, then press the UNIT ON/OFF key, then release both keys. Now, check to see if Error Codes are displayed, being sure to toggle through all error and temperature readings by pressing either COLDER key or either WARMER key. (See Error Code Table Below)

If Error Codes appear during Diagnostic Mode, follow the Error Code Troubleshooting Guide on the following pages. The left column lists the error codes. The right column explains what tests to perform and/or what action to take to correct the error.

NOTE: *If error codes are observed in diagnostic mode, a non-flashing SERVICE indicator will appear on the LCD when Diagnostic Mode ends, indicating error codes are stored. Error Codes must be manually cleared from the electronic control memory. To clear the non-flashing SERVICE indicator and the error codes, the problem must be corrected and the unit must be ON. Then, press and hold the Door Ajar Alarm Bell ON/OFF key for 15 seconds. The control will emit a short "beep" when the SERVICE indicator and error codes are cleared.*

Error Code Table

CODE	INDICATION
05	***Refrig. Cabinet Thermistor read open or shorted for 10+ seconds, or repeatedly read erratic temp's***
06	***Refrig. Evaporator Thermistor read open or shorted for 10+ seconds, or repeatedly read erratic temp's***
07	***Freezer Cabinet Thermistor read open or shorted for 10+ seconds, or repeatedly read erratic temp's***
08	***Freezer Evaporator Thermistor read open or shorted for 10+ seconds, or repeatedly read erratic temp's***
20	***Defrost Under-heat with No Voltage Feedback Through Gray/White Wire at Defrost Start***
21	***Defrost Overheat***
22	***No Voltage Feedback Through Gray/White Wire at Defrost Start***
23	***Defrost Overheat with No Voltage Feedback through Gray/White Wire at Defrost Start***
24	***Defrost Under-heat***
30	***Excessive Icemaker Water Valve Solenoid Activation (Exceeded 15 Seconds, 5 Times)***
40	***Excessive Freezer Compressor Run***
50	***Excessive Refrigerator Compressor Run***

ERROR CODE TROUBLESHOOTING GUIDE

ERROR CODE	TEST / ACTION
05	a. Check refrigerator compartment thermistor electrical connections and continuity from thermistor to J1 on control board. Reconnect / repair connections. b. Check resistance of refrigerator compartment thermistor for 30,000 to 33,000 ohms at 32°F (0°C). Replace if defective.
06	a. Check refrigerator evaporator thermistor electrical connections and continuity from thermistor to J1 on control board. Reconnect / repair connections. b. Check resistance of refrigerator evaporator thermistor for 30,000 to 33,000 ohms at 32°F (0°C). Replace if defective.
07	a. Check freezer compartment thermistor electrical connections and continuity from thermistor to J1 on control board. Reconnect / repair connections. b. Check resistance of freezer compartment thermistor for 30,000 to 33,000 ohms at 32°F (0°C). Replace if defective.
08	a. Check freezer evaporator thermistor electrical connections and continuity from thermistor to J1 on control board. Reconnect / repair connections. b. Check resistance of freezer evaporator thermistor for 30,000 to 33,000 ohms at 32°F (0°C). Replace if defective.
20	a. With a cold evaporator (< 10°F/ < -12°C), initiate Manual Defrost. If compressor starts 5 minutes after defrost is initiated, check Grey/White wire connections and continuity from defrost heater to J4-4 on control board. Reconnect / repair Grey/White wire &/or electrical connections. b. Check for proper ohm readings of defrost heater. Replace heater if defective. c. Check defrost terminator and its electrical connections, Reconnect / repair bad connections or replace terminator if defective. d. Initiate Manual Defrost, check for 115V AC at E2 on control board. If no voltage, replace board. e. Initiate Manual Defrost, check for 115V AC from E2 (Blue Wire) on control board to defrost terminator. Reconnect / repair blue wire &/or electrical connections. f. Reference wiring diagram to identify components in same White wire circuit as defrost heater. Check all White wire electrical connections and continuity from defrost heater to J7-8 on control board.
21	a. Check for proper mounting and location of freezer evaporator thermistor and defrost heater. Remount correctly. b. Check for correct wire connection at control board, Blue wire at E2 on control board. If connected to wrong pin, reconnect correctly. c Check for electrical short of Blue wire to another circuit. Repair Blue wire &/or electrical connections. d. Check for proper operation of defrost terminator: Cut-in 30°F(-1°C) / Cut-out 55°F (13°C). For model 601F-3 ONLY: Cut-in 30°F (-1°C) / Cut-out 70°F (21°C). Replace if defective.
22	a. Initiate Manual Defrost. If compressor starts 5 minutes after defrost is initiated, check Grey/White wire connections and continuity from defrost heater to J4-4 on control board. Reconnect / repair Grey/White wire &/or electrical connections.
23	a. Check for proper mounting and location of freezer evaporator thermistor and defrost heater. Remount correctly. b. Check for correct wire connection at control board, Blue wire at E2 on control board. If connected to wrong pin, reconnect correctly. c Check for electrical short of Blue wire to another circuit. Repair Blue wire &/or electrical connections. d. Initiate Manual Defrost. If compressor starts 5 minutes after defrost is initiated, check Grey/White wire connections and continuity from defrost heater to J4-4 on control board. Reconnect / repair Grey/White wire &/or electrical connections.
24	a. Check for proper ohm readings of defrost heater. Replace heater if defective. b. Check for proper mounting and location of freezer evaporator thermistor and defrost heater. Remount correctly.

NOTE: *After repairs, always clear Error Codes by pressing Bell ON/OFF key for 15 seconds.*

ERROR CODE TROUBLESHOOTING GUIDE

ERROR CODE	TEST / ACTION
30	A. Check for jammed cube in icemaker. B. Reference wiring diagram to identify components in same White wire circuit as water valve solenoid. Check all White wire electrical connections and continuity from water valve solenoid to J7-8 on control board.
40	A. If Error Code 07, 20, 21, 22, 23, or 24 is also displayed during Diagnostic Mode, see Test/Actions under that code. B. Check for obstructions to freezer door/drawer closing. Remove obstruction. C. Check cleanliness of condenser. Clean if needed. D. Check for obstruction to condenser fan blade or loose fan blade. Remove obstruction/Tighten Blade. E. Check evaporator fan blade position and for obstructions. Reposition if incorrect/Remove obstruction. F. Check resistance of freezer compartment thermistor - 30,000 to 33,000 ohms at 32°F (0°C). Replace if defective. G. With unit on, check to see if lights shut off when light switch is depressed. Repair defective wiring or replace defective switch. H. With freezer compressor running: 1. (Model 601F-3 only) Check for 115 V AC from compressor to condenser fan. Repair defective wiring or replace defective motor. 2. (All models except 601R-3, 601RG-3, 601F-3) check for 115 V AC from control board to condenser fan. Repair defective wiring, or replace defective motor, or replace defective board. I. (All models) With freezer compressor running and fan switches depressed, check for 115 V AC from compressor to evaporator fan motor. Repair wiring, or replace defective switch, or replace defective fan motor. J. Check sealed system for leaks, restrictions or inefficient compressor.
50	A. If Error Code 05, or 06 is also displayed during Diagnostic Mode, see Test/Actions under that code. B. Check for obstructions to refrigerator door closing. Remove obstruction. C. Check cleanliness of condenser. Clean if needed. D. Check for obstruction to condenser fan blade or loose fan blade. Remove obstruction/Tighten Blade. E. Check evaporator fan blade position and for obstructions. Reposition if incorrect/Remove obstruction. F. Check resistance of refrigerator compartment thermistor - 30,000 to 33,000 ohms at 32°F (0°C). Replace if defective. G. With unit on, check to see if lights shut off when light switch is depressed. Repair defective wiring or replace defective switch. H. With refrigerator compressor running: 1. (Models 601R-3 and 601RG-3 only) Check for 115 V AC from compressor to condenser fan. Repair defective wiring or replace defective motor. 2. (All models except 601R-3, 601RG-3, 601F-3) check for 115 V AC from control board to condenser fan. Repair defective wiring, or replace defective motor, or replace defective board. I. (All models) With refrigerator compressor running and fan switches depressed, check for 115 V AC from compressor to evaporator fan motor. Repair wiring, or replace defective switch, or replace defective fan motor. J. Check sealed system for leaks, restrictions or inefficient compressor.

NOTE: *After repairs, always clear Error Codes by pressing Bell ON/OFF key for 15 seconds.*

HOW TO USE GENERAL TROUBLESHOOTING GUIDE

The General Troubleshooting Guide Table of Contents on the following page indicates how the General Trouble Shooting Guide is arranged. Match the description of the problem the unit is experiencing with those in the table. To the left of the problem description is a letter. Locate that letter in the left column of the Troubleshooting Guide. The information in the center column of the Troubleshooting Guide identifies possible causes for the problem. The information in the right column explains the tests to perform and/or what action to take to correct the problem.

***For Problems "A" through "L"*:**

1. Begin troubleshooting by observing the compartment set points.
2. If the set-points are normal, initiate Diagnostic Mode by pressing and holding either COLDER key, then press the UNIT ON/OFF key, then release both keys.
3. When Diagnostic Mode is initiated, check to see if "Error Codes" are present, being sure to toggle through all the error and temperature readings by pressing either COLDER key or either WARMER key. (See Thermistor Location Code Tables below.)
4. If Error Codes are present, refer to Error Code Troubleshooting Guide on previous pages.
5. If there are no Error Codes, initiate Manual Component Activation Mode (which lasts for 5 minutes) by pressing and holding the desired compartment COLDER and UNIT ON/OFF keys for 10 seconds, then observe the evaporator temperatures.

   NOTE: *Verify that the compressor is operating before observing evaporator temperatures. If the problem is in the refrigerator section, the refrigerator door must be left open for 5 minutes with the compressor running.*
6. After observing the evaporator temperatures as instructed above, take note of the *"Pointers"* in the first column of the troubleshooting guide under problems "A" through "D". The *"Pointers"* list what possible causes to check based on the evaporator temperatures observed.

Thermistor Location Code Tables

ALL MODELS EXCEPT 601's		MODEL 601R & 601RG		MODEL 601F	
THERMISTOR LOCATION	**CODE**	**THERMISTOR LOCATION**	**CODE**	**THERMISTOR LOCATION**	**CODE**
Freezer Compartment	*F*	*Refrigerator Compartment*	*r*	*Freezer Compartment*	*F*
Refrigerator Compartment	*r*	*Refrigerator Evaporator*	*rE*	*Freezer Evaporator*	*FE*
Freezer Evaporator	*FE*				
Refrigerator Evaporator	*rE*				

For All Problems:

If the unit's temperature history is needed to help diagnose the problem, initiate Temperature Log Recall Mode as described below. This allows the preceding fourteen days of the unit's temperature history to be observed.

a. *To View Compartment Temperature History Only:* Begin with the unit ON. Now, press and hold the desired compartment WARMER key, then press the UNIT ON/OFF key, then release both keys.

b. *To View Compartment or Evaporator Temperature History:* Begin with the unit on and in Diagnostic Mode. While in Diagnostic Mode, toggle through the readings until the desired thermistor temperature is displayed on the LCD. Now, press the WARMER key for that compartment and the UNIT ON/OFF key simultaneously.

GENERAL TROUBLESHOOTING GUIDE TABLE OF CONTENTS

Ltr	Problem Description	Page #
A.	Error Codes and **"SERVICE"** Flashing	8-7
B.	**"EE"** Displayed in Place of Freezer Temperature with **"SERVICE"** Flashing	8-7
C.	**"EE"** Displayed in Place of Refrigerator Temperature with **"SERVICE"** Flashing	8-7
D.	Warm or Normal Temperatures Displayed with **"SERVICE"** Alone Flashing	8-7
E.	Warm or Normal Temperatures Displayed with non-flashing **"SERVICE"** Displayed	8-7
F.	Erratic Temperatures with or without **"SERVICE"** Flashing	8-7
G.	Warm Freezer Compartment Temp. with **"SERVICE"** Flashing on the LCD	8-7
H.	Warm Freezer Compartment Temp. without "SERVICE" Flashing on the LCD	8-9
I.	Warm Refrigerator Compartment Temp. with **"SERVICE"** Flashing on the LCD	8-11
J.	Warm Refrigerator Compartment Temp. without "SERVICE" Flashing on the LCD	8-12
K.	Warm or Normal Temp. in Both Compartment with **"SERVICE"** Flashing on the LCD	8-13
L.	Warm Temp. in Both Compartments without "SERVICE" Flashing on the LCD	8-14
M.	Product Temp. 10° or More Colder or Warmer than Displayed Temp.	8-14
N.	1. "Extremely" Cold Temp. Displayed - (1° to 7° in Refrigerator and -21° to -15° in Freezer)	8-14
	2. If outside U.S. - "Extremely" Warm Temp. Displayed - (34° to 45° in Refrig. and -5° to 5° in Freezer)	8-14
O.	No Ice with **"ICE"** and **"SERVICE"** Flashing on LCD	8-15

PROBLEM	POSSIBLE CAUSE	TEST / ACTION
A. Error Codes & "SERVICE" Flashing	**Unit Experienced Temperature Problems**	See Error Code Troubleshooting Guide
B. "EE" Displayed in Place of Freezer Temperature with "SERVICE" Flashing	**Freezer Compartment Thermistor Disconnected, Shorted, or Misread**	Check wiring from thermistor to control board. Reconnect/repair connections. Resistance of thermistor = 30,000-33,000 ohms at 32°F/0°C. Replace if defective.
C. "EE" Displayed in place of Refrigerator Temperature with "SERVICE" Flashing	**Refrigerator Compartment Thermistor Disconnected, Shorted, or Misread**	Check wiring from thermistor to control board. Reconnect/repair connections. Resistance of thermistor = 30,000-33,000 ohms at 32°F/0°C. Replace if defective.
D. Warm or Normal Temp's Displayed with "SERVICE" Alone Flashing	**Unit Experienced Temperature Problems**	See Error Code Troubleshooting Guide
	Refrigerator Evaporator Thermistor Disconnected, Shorted, or Misread	Check wiring from thermistor to control board. Reconnect/repair connections. Resistance of thermistor = 30,000-33,000 ohms at 32°F/0°C. Replace if defective.
E. Warm or Normal Temperatures Displayed with non-flashing "SERVICE" Displayed	**Error Codes Observed in Diagnostic Mode, but not Cleared from Memory**	Enter diagnostic mode to observe error codes. See Error Code Troubleshooting Guide. Verify unit was repaired for error codes displayed. Press and hold alarm key for 15 seconds to clear error codes.
F. Erratic Temperatures with or without "SERVICE" Flashing	**Control Board Configured for Wrong Model**	*If possible, reconfigure to correct model. If not possible, replace control board.*
G. Warm Freezer Temperature with "SERVICE" Flashing ***Pointers:*** *1. Evap Temp -20°F (-29°C) or lower, see:* • *Door ajar* • *Lights ON w/door closed* • *Evaporator fan fault* • *Compartment thermistor mis-read* • *Evaporator heavily frosted* • *Sealed system fault: leak or partial restriction* *2. Evap Temp between -19°F (-28°C) and 0°F (-17°C), see:* • *Condenser Air Flow* • *Compartment thermistor mis-read* • *Sealed system fault: leak* *3. Evaporator Temp 0°F (-17°C) or higher, see:* • *Power to compressor fault* • *Sealed system Fault: leak, restriction, inefficient compres-sor* *(Continued)* *(See **NOTES** on next page)*	**Door Ajar** a. Food product obstruction b. Door/cabinet hinge problem	 a. Move obstruction. b. Check and replace hinge if defective.
	Condenser Air Flow a. Dirty condenser b. Condenser fan blade obstructed or blade is loose c. Condenser fan motor disconnected d. Condenser fan motor defective e. No power from control board to con-denser fan (Does not apply to single compressor models) *(**NOTE:** A compressor must be running)*	 a. Clean condenser. b. Remove obstruction or tighten nut on motor shaft. c. Check electrical connections from motor to J7-1 on control board, or from motor to com-pressor on single compressor models. Reconnect / repair connections. d. Check for 115V AC to motor, replace motor if defective. e. Check for 115V AC at J7-1 on control board (with compressor running). Replace board if defective.

PROBLEM	POSSIBLE CAUSE	TEST / ACTION
(Continued) **G. Warm Freezer Temperature with "SERVICE" Flashing** ***Pointers:*** *1. Evap Temp -20°F (-29°C) or lower, see:* • *Door ajar* • *Lights ON w/door closed* • *Evaporator fan fault* • *Compartment thermistor misread* • *Evaporator heavily frosted* • *Sealed system fault: leak or partial restriction* *2. Evap Temp between -19°F (-28°C) and 0°F (-17°C), see:* • *Condenser Air Flow* • *Compartment thermistor misread* • *Sealed system fault: leak* *3. Evaporator Temp 0°F (-17°C) or higher, see:* • *Power to compressor fault* • *Sealed system Fault: leak, restriction, inefficient compressor* ***NOTE:*** *"Pointers" do not apply to cabinet initial pulldown from ambient temperatures.* ***NOTE:*** *To clear flashing SERVICE indicator after repairs, power OFF, then back ON.* ***NOTE:*** *To clear non-flashing SERVICE indicator after repairs, press door ajar alarm bell ON/OFF key for 15 seconds.*	**Light ON with Door Closed** a. Switch depressor missing or bent, not depressing light switch b. Faulty light switch	a. Replace/straighten switch depressor. b. Check operation of light switches, lights off when switch is depressed. Replace switch if defective.
	Evaporator Fan Fault a. Switch depressor missing or bent, not depressing fan switch b. Fan blade obstructed or out of position c. Faulty fan switch *(**NOTE:** A compressor must be running)* d. Evaporator fan motor disconnected e. Evaporator fan motor defective *(**NOTE:** Compressor must be running)*	a. Replace/straighten switch depressor. b. Move obstruction or reposition blade. c. Check for 115V AC to fan switch, depress fan switch and check for 115V AC from switch to motor. Replace switch if defective. d. Check electrical connections of motor. Reconnect / repair bad connections. e. Check for 115V AC at fan motor with fan switch depressed. Replace motor if defective.
	Compartment Thermistor Misread	Check resistance of compartment thermistor for 30,000 to 33,000 ohms at 32°F (0°C). Replace if defective.
	Evaporator Heavily Frosted a. Door ajar b. Evaporator fan fault c. Compartment thermistor misread d. Defrost heater or drain trough heater disconnected or faulty e. Defrost terminator disconnected or faulty. f. Defrost sense line disconnected. g. No power from control board to defrost circuit	a. See Door Ajar on previous page. b. See Evaporator Fan Fault on previous page. c. See Compartment Thermistor Misread on previous page. d. Check electrical connections of heaters. Reconnect / repair bad connections. Check resistance of heaters, replace if defective. e. Check electrical connections, Reconnect / repair bad connections or replace terminator if defective. f. Look for Error Codes 20, 22 or 23 or Manually initiate defrost by pressing ICE key for 5 seconds. If defrost lasts exactly 5 minutes, check all connections of gray/white wire from terminator to J4-4 on control board. Reconnect / repair bad connections. g. Manually initiate defrost by pressing ICE key for 5 seconds. Check for 115V AC at E2 on control board. Replace control board if defective.
	Power to Compressor Fault	Initiate Manual Component Activation Mode and check for 115V AC at E7 on control board. Replace control board if defective.
	Sealed System Fault • Sealed System Leak • Sealed System Restriction • Inefficient Compressor	See Sealed System Diagnostic Tables at back of Troubleshooting Guide

PROBLEM	POSSIBLE CAUSE	TEST / ACTION
H. Warm Freezer Temperatures <u>without</u> "SERVICE" Flashing ***Pointers:*** *1. "Sr" appears during Diagnostic Mode, see:* • *Unit in Showroom Mode* *2. Evap Temp -20°F (-29°C) or lower, see:* • *Door ajar* • *Lights ON w/door closed* • *Evaporator fan fault* • *Compartment thermistor mis-read* • *Evaporator heavily frosted* • *Sealed system fault: leak or partial restriction* *3. Evap Temp between -19°F (-28°C) and 0°F (-17°C), see:* • *Warm food load* • *High room ambient* • *Door ajar* • *Condenser Air Flow* • *Compartment thermistor mis-read* • *Sealed system fault: leak* *4. Evaporator Temp 0°F (-17°C) or higher, see:* • *Power to compressor fault* • *Sealed system Fault: leak, restriction, inefficient compres-sor* ***NOTE:*** *"Pointers" do not apply to cabinet initial pulldown from ambient temperatures.* ***NOTE:*** *To clear non-flashing SERVICE indicator after repairs, press door ajar alarm bell ON/OFF key for 15 seconds.* *(Continued)*	**No Power to Unit**	Check power to unit, plug unit in or switch supply circuit breaker ON.
	Unit Switched OFF	Check for "OFF" displayed at LCD. If off, press UNIT ON/OFF key.
	Unit in Showroom Mode	Press UNIT ON/OFF key to OFF, then press and hold WARMER & COLDER keys, and press UNIT ON/OFF key.
	Control Set Too High	Check set-point. If high, adjust.
	Warm Food Load	Check contents of freezer for warm food load. Instruct customer.
	High Room Ambient	Instruct customer unit performs best between 60°F(16°C) and 90°F(32°C).
	Door Ajar a. Food product obstruction b. Door/cabinet hinge problem	 a. Move obstruction. b. Check and replace hinge if defective.
	Condenser Air Flow a. Dirty condenser b. Condenser fan blade obstructed or blade is loose c. Condenser fan motor disconnected d. Condenser fan motor defective e. No power from control board to con-denser fan (Does not apply to single compressor models) (***NOTE:*** *A compressor must be running)*	 a. Clean condenser. b. Remove obstruction or tighten nut on motor shaft. c. Check electrical connections from motor to J7-1 on control board, or from motor to com-pressor on single compressor models. Reconnect / repair connections. d. Check for 115V AC to motor, replace motor if defective. e. Check for 115V AC at J7-1 on control board (with compressor running). Replace board if defective.
	Light ON with Door Closed a. Switch depressor missing or bent, not depressing light switch b. Faulty light switch	 a. Replace/straighten switch depressor. b. Check operation of light switches, lights off when switch is depressed. Replace switch if defective.

PROBLEM	POSSIBLE CAUSE	TEST / ACTION
(Continued) **H. Warm Freezer Temperatures <u>without</u> "SERVICE" Flashing** ***Pointers:*** *1. "Sr" appears during Diagnostic Mode, see:* • *Unit in Showroom Mode* *2. Evap Temp -20°F (-29°C) or lower, see:* • *Door ajar* • *Lights ON w/door closed* • *Evaporator fan fault* • *Compartment thermistor misread* • *Evaporator heavily frosted* • *Sealed system fault: leak or partial restriction* *3. Evap Temp between -19°F (-28°C) and 0°F (-17°C), see:* • *Warm food load* • *High room ambient* • *Door ajar* • *Condenser Air Flow* • *Compartment thermistor misread* • *Sealed system fault: leak* *4. Evaporator Temp 0°F (-17°C) or higher, see:* • *Power to compressor fault* • *Sealed system Fault: leak, restriction, inefficient compressor* ***NOTE:*** *"Pointers" do not apply to cabinet initial pulldown from ambient temperatures.* ***NOTE:*** *To clear non-flashing SERVICE indicator after repairs, press door ajar alarm bell ON/OFF key for 15 seconds.*	**Evaporator Fan Fault** a. Switch depressor missing or bent, not depressing fan switch b. Fan blade obstructed or out of position c. Faulty fan switch *(**NOTE:** A compressor must be running)* d. Evaporator fan motor disconnected e. Evaporator fan motor defective *(**NOTE:** Compressor must be running)*	a. Replace/straighten switch depressor. b. Move obstruction or reposition blade. c. Check for 115V AC to fan switch, depress fan switch and check for 115V AC from switch to motor. Replace switch if defective. d. Check electrical connections of motor. Reconnect / repair bad connections. e. Check for 115V AC at fan motor with fan switch depressed. Replace motor if defective.
	Compartment Thermistor Misread	Check resistance of compartment thermistor for 30,000 to 33,000 ohms at 32°F (0°C). Replace if defective.
	Evaporator Heavily Frosted a. Door ajar b. Evaporator fan fault c. Compartment thermistor misread d. Defrost heater or drain trough heater disconnected or faulty e. Defrost terminator disconnected or faulty. f. Defrost sense line disconnected. g. No power from control board to defrost circuit	a. See Door Ajar on previous page. b. See Evaporator Fan Fault on previous page. c. See Compartment Thermistor Misread on previous page. d. Check electrical connections of heaters. Reconnect / repair bad connections. Check resistance of heaters, replace if defective. e. Check electrical connections, Reconnect / repair bad connections or replace terminator if defective. f. Look for Error Codes 20, 22 or 23 or Manually initiate defrost by pressing ICE key for 5 seconds. If defrost lasts exactly 5 minutes, check all connections of gray/white wire from terminator to J4-4 on control board. Reconnect / repair bad connections. g. Manually initiate defrost by pressing ICE key for 5 seconds. Check for 115V AC at E2 on control board. Replace control board if defective.
	Power to Compressor Fault	Initiate Manual Component Activation Mode and check for 115V AC at E7 on control board. Replace control board if defective.
	Sealed System Fault • Sealed System Leak • Sealed System Restriction • Inefficient Compressor	See Sealed System Diagnostic Tables at back of Troubleshooting Guide

PROBLEM	POSSIBLE CAUSE	TEST / ACTION
I. Warm Refrigerator Temperatures with "SERVICE" Flashing ***Pointers:*** *Refrigerator door must be open and compressor running for five minutes.* *1. "EE" appears in place of refrigerator evap. temperature, see:* • *Evaporator thermistor disconnected or shorted* *2. Evaporator Temp 15°F (-9°C) or lower within 5 minutes w/door open, see:* • *Door ajar* • *Lights stay ON* • *Evaporator fan fault* • *Compartment or evaporator thermistor misread* • *Evaporator heavily frosted* • *Sealed system fault: leak or partial restriction* *3. Evaporator Temp cannot pull below 30°F (-1°C) within 5 minutes w/door open, see:* • *Condenser Air Flow* • *Compartment or evaporator thermistor misread* • *Sealed system fault: leak or inefficient compressor* *4.* Evaporator Temp 35°F (2°C) or higher after 5 minutes w/door open, see: • *Condenser Air Flow* • *Power to compressor fault* • *Sealed system fault: leak, restriction or inefficient compressor* ***NOTE:*** *"Pointers" do not apply to cabinet initial pulldown from ambient temperatures.* ***NOTE:*** *To clear flashing SERVICE indicator after repairs, power OFF, then back ON.* ***NOTE:*** *To clear non-flashing SERVICE indicator after repairs, press door ajar alarm bell ON/OFF key for 15 seconds.* *(Continued)*	**Door Ajar** a. Food product obstruction b. Door/cabinet hinge problem	 a. Move obstruction. b. Check and replace hinge if defective.
	Condenser Air Flow a. Dirty condenser b. Condenser fan blade obstructed or blade is loose c. Condenser fan motor disconnected d. Condenser fan motor defective e. No power from control board to condenser fan (Does not apply to single compressor models) *(**NOTE:** A compressor must be running)*	 a. Clean condenser. b. Remove obstruction or tighten nut on motor shaft. c. Check electrical connections from motor to J7-1 on control board, or from motor to compressor on single compressor models. Reconnect / repair connections. d. Check for 115V AC to motor, replace motor if defective. e. Check for 115V AC at J7-1 on control board (with compressor running). Replace board if defective.
	Light ON with Door Closed a. Switch depressor missing or bent, not depressing light switch b. Faulty light switch	 a. Replace/straighten switch depressor. b. Check operation of light switches, lights off when switch is depressed. Replace switch if defective.
	Evaporator Fan Fault a. Switch depressor missing or bent, not depressing fan switch b. Fan blade obstructed or out of position c. Faulty fan switch *(**NOTE:** A compressor must be running)* d. Evaporator. fan motor disconnected e. Evaporator fan motor defective *(**NOTE:** Compressor must be running)*	 a. Replace/straighten switch depressor. b. Move obstruction or reposition blade. c. Check for 115V AC to fan switch, depress fan switch and check for 115V AC from switch to motor. Replace switch if defective. d. Check electrical connections of motor. Reconnect / repair bad connections. e. Check for 115V AC at fan motor with fan switch depressed. Replace motor if defective.
	Evaporator Thermistor Disconnected or Shorted	Check for "EE" & "rE" in diagnostic mode. Check refrigerator evaporator thermistor electrical connections from thermistor to J1 on control board. Reconnect / repair connections. Check resistance of refrigerator evaporator thermistor for 30,000 to 33,000 ohms at 32°F (0°C). Replace if defective.
	Compartment or Evaporator Thermistor Misread	Check resistance of refrigerator compartment and evaporator thermistors for 30,000 to 33,000 ohms at 32°F (0°C). Replace if defective.
	Evaporator Heavily Frosted a. Door or drawer ajar b. Evaporator fan fault c. Thermistor misread	 a. See Door Ajar above. b. See Evaporator Fan Fault above. c. See Thermistor Misread above.

PROBLEM	POSSIBLE CAUSE	TEST / ACTION
(Continued) **I. Warm Refrigerator Temperatures with "SERVICE" Flashing** *(See Pointers on previous page)*	**Power to Compressor Fault**	Check for 115V AC E6 on control board. Replace control board if defective.
	Sealed System Fault • Sealed System Leak • Sealed System Restriction • Inefficient Compressor	See Sealed System Diagnostic Tables at back of Troubleshooting Guide
J. Warm Refrigerator Temperatures without "SERVICE" Flashing ***Pointers:*** *Refrigerator door must be open and compressor running for five minutes.* *1. "Sr" appears during Diagnostic Mode, see:* • *Unit in Showroom Mode* *2. Evaporator Temp 15°F (-9°C) or lower within 5 minutes w/door open, see:* • *Door ajar* • *Lights stay ON* • *Evaporator fan fault* • *Compartment or evaporator thermistor misread* • *Evaporator heavily frosted* • *Sealed system fault: leak or partial restriction* *3. Evaporator Temp cannot pull below 30°F (-1°C) within 5 minutes w/door open, see:* • *Warm food load* • *High room ambient* • *Door ajar* • *Condenser Air Flow* • *Compartment or evaporator thermistor misread* • *Sealed system fault: leak or inefficient compressor* *4. Evaporator Temp 35°F (2°C) or higher after 5 minutes w/door open, see:* • *Condenser Air Flow* • *Power to compressor fault* • *Sealed system fault: leak, restriction or inefficient compressor* ***NOTE:** "Pointers" do not apply to cabinet initial pulldown from ambient temperatures.* ***NOTE:** To clear non-flashing SERVICE indicator after repairs, press door ajar alarm bell ON/OFF key for 15 seconds.* *(Continued)*	**No Power to Unit**	Check power to unit, plug unit in or switch supply circuit breaker ON.
	Unit Switched OFF	Check for "OFF" displayed at LCD. If off, press UNIT ON/OFF key.
	Unit in Showroom Mode	Press UNIT ON/OFF key to OFF, then press and hold WARMER & COLDER keys, and press UNIT ON/OFF key.
	Control Set Too High	Check set-point. If high, adjust.
	Warm Food Load	Check contents of refrigerator for warm food load. Instruct customer.
	High Room Ambient	Instruct customer unit performs best between 60°F(16°C) and 90°F(32°C).
	Door Ajar a. Food product obstruction b. Door/cabinet hinge problem	a. Move obstruction. b. Check and replace hinge if defective.
	Condenser Air Flow a. Dirty condenser b. Condenser fan blade obstructed or blade is loose c. Condenser fan motor disconnected d. Condenser fan motor defective e. No power from control board to condenser fan (Does not apply to single compressor models) *(**NOTE:** A compressor must be running)*	a. Clean condenser. b. Remove obstruction or tighten nut on motor shaft. c. Check electrical connections from motor to J7-1 on control board, or from motor to compressor on single compressor models. Reconnect / repair connections. d. Check for 115V AC to motor, replace motor if defective. e. Check for 115V AC at J7-1 on control board (with compressor running). Replace board if defective.
	Light ON with Door Closed a. Switch depressor missing or bent, not depressing light switch b. Faulty light switch	a. Replace/straighten switch depressor. b. Check operation of light switches, lights off when switch is depressed. Replace switch if defective.

PROBLEM	POSSIBLE CAUSE	TEST / ACTION
(Continued) **J. Warm Refrigerator Temperatures without "SERVICE" Flashing** *(See Pointers on previous page)*	**Evaporator Fan Fault** a. Switch depressor missing or bent, not depressing fan switch b. Fan blade obstructed or out of position c. Faulty fan switch *(NOTE: A compressor must be running)* d. Evaporator fan motor disconnected e. Evaporator fan motor defective *(NOTE: Compressor must be running)*	 a. Replace/straighten switch depressor. b. Move obstruction or reposition blade. c. Check for 115V AC to fan switch, depress fan switch and check for 115V AC from switch to motor. Replace switch if defective. d. Check electrical connections of motor. Reconnect / repair bad connections. e. Check for 115V AC at fan motor with fan switch depressed. Replace motor if defective.
	Compartment or Evaporator Thermistor Misread	Check resistance of refrigerator compartment and evaporator thermistors for 30,000 to 33,000 ohms at 32°F (0°C). Replace if defective.
	Evaporator Heavily Frosted a. Door or drawer ajar b. Evaporator fan fault c. Thermistor misread	 a. See Door Ajar on previous page. b. See Evaporator Fan Fault above. c. See Thermistor Misread above.
	Power to Compressor Fault	Check for 115V AC E6 on control board. Replace control board if defective.
	Sealed System Fault • Sealed System Leak • Sealed System Restriction • Inefficient Compressor	See Sealed System Diagnostic Tables at back of Troubleshooting Guide
K. Warm or Normal Temperatures in Both Compartments with "SERVICE" Flashing	**High Room Ambient**	Instruct customer unit performs best between 60°F(16°C) and 90°F(32°C).
	Condenser Air Flow a. Dirty condenser b. Condenser fan blade obstructed or blade is loose c. Condenser fan motor disconnected d. Condenser fan motor defective e. No power from control board to condenser fan (Does not apply to single compressor models) *(NOTE: A compressor must be running)*	 a. Clean condenser. b. Remove obstruction or tighten nut on motor shaft. c. Check electrical connections from motor to J7-1 on control board, or from motor to compressor on single compressor models. Reconnect / repair connections. d. Check for 115V AC to motor, replace motor if defective. e. Check for 115V AC at J7-1 on control board (with compressor running). Replace board if defective.
	Refrigerator Evaporator Thermistor Disconnected or Shorted	Check for "EE" & "rE" in diagnostic mode. Check refrigerator evaporator thermistor electrical connections from thermistor to control board. Reconnect / repair connections. Check resistance of refrigerator evaporator thermistor for 30,000 to 33,000 ohms at 32°F (0°C). Replace if defective.

PROBLEM	POSSIBLE CAUSE	TEST / ACTION
L. Warm Temperatures in Both Compartments <u>without</u> "SERVICE" Flashing	**No Power to Unit**	Check power to unit, plug unit in or switch supply circuit breaker ON.
	Unit Switched OFF	Check for "OFF" displayed at LCD. If off, press UNIT ON/OFF key.
	Unit in Showroom Mode	Press UNIT ON/OFF key to OFF, then press and hold WARMER& COLDER keys, and press UNIT ON/OFF key.
	Control Set Too High	Check set-point. If high, adjust.
	Warm Food Load	Check contents of freezer for warm food load. Instruct customer.
	High Room Ambient	Instruct customer unit performs best between 60°F(16°C) and 90°F(32°C).
	Door Ajar a. Food product obstruction b. Door/cabinet hinge problem	 a. Move obstruction. b. Check and replace hinge if defective.
	Condenser Air Flow a. Dirty condenser b. Condenser fan blade obstructed or blade is loose c. Condenser fan motor disconnected d. Condenser fan motor defective e. No power from control board to condenser fan (Does not apply to single compressor models) *(**NOTE:** A compressor must be running)*	 a. Clean condenser. b. Remove obstruction or tighten nut on motor shaft. c. Check electrical connections from motor to J7-1 on control board, or from motor to compressor on single compressor models. Reconnect / repair connections. d. Check for 115V AC to motor, replace motor if defective. e. Check for 115V AC at J7-1 on control board (with compressor running). Replace board if defective.
M. Product Temperature 10° or More Colder than Displayed Temperature	**Compartment Thermistor Misread**	Check resistance of compartment thermistor for 30,000 to 33,000 ohms at 32°F (0°C). Replace if defective.
N. 1. "Extremely" Cold Temperatures Displayed *(1° to 7° in Refrigerator and -21° to -15° in Freezer)* **2. If outside US - "Extremely" Warm Temperatures Displayed *(34° to 45° in Refrigerator and -5° to 5° in Freezer)***	**1. Control Set to Display Celsius but Customer Thought it Was Fahrenheit** **2. If Outside US - Control Set to Display Fahrenheit but Customer Thought it Was Celsius**	1. Switch unit OFF, then ON, then press & hold Bell key and UNIT ON/OFF key for 10 seconds. 2. Switch unit OFF, then ON, then press & hold Bell key and UNIT ON/OFF key for 10 seconds.

PROBLEM	POSSIBLE CAUSE	TEST / ACTION
O. "ICE" and "SERVICE" Flashing on LCD	**Water Valve Energized Longer then Fifteen Seconds**	Check icemaker area for jammed ice cube, clear jam if present. Check levelness of ice-maker, level if needed. Check position of fill cup. Reposition if in ice path. Check water supply pressure; must be constant 20-100 PSI. If not, instruct customer. Check water valve operation, opens when 115V AC is applied, closes completely when 115V AC is removed. Water valve Ohms = 160. Replace if defective.

SEALED SYSTEM DIAGNOSTICS TABLES

NORMAL OPERATING PRESSURES TABLE NOTES:

- Only enter the sealed system to check pressures if the Error Code Troubleshooting Guide and General Troubleshooting Guide could not pinpoint the cause of the temperature problem.
- Always use solder-on process valves when entering the sealed system. Do NOT use bolt-on process valves as they are prone to leak.
- Whenever servicing the sealed system, the high-side filter-drier MUST be replaced.
- Pressures listed below are not indicative of initial pull down, but rather of a steadily running and properly functioning appliance.
- Pressures listed are for reference only, as actual pressure readings may vary because of one or more of the following reasons:
  1. Ambient temperatures (Pressures are based on a 70°F (21°C) Ambient).
  2. Temperature set-points (Pressures listed below are based on set-points of 0°F (-18°C) in freezers and 38°F (3°C) in refrigerators)
  3. Food load quantity and temperature.
  4. Condenser cleanliness.
  5. Whether or not one or both refrigeration systems are operating.
  6. Gauge calibration.

NORMAL OPERATING PRESSURES			
Model		Low-Side	High-Side
601R-3	Refrigerator	0 - 12 psi to 30 - 42 psi	75 psi to 110 psi
601RG-3	Refrigerator	0 - 12 psi to 30 - 42 psi	75 psi to 110 psi
601F-3	Freezer	5” Vac - 1 psi to 6 - 12 psi	75 psi to 120 psi
611-3	Refrigerator	0 - 12 psi to 30 - 42 psi	75 psi to 110 psi
	Freezer	5” Vac - 1 psi to 6 - 12 psi	75 psi to 120 psi
611G-3	Refrigerator	0 - 12 psi to 30 - 42 psi	75 psi to 110 psi
	Freezer	5” Vac - 1 psi to 6 - 12 psi	75 psi to 120 psi
632-3	Refrigerator	0 - 12 psi to 30 - 42 psi	75 psi to 110 psi
	Freezer	5” Vac - 1 psi to 6 - 12 psi	75 psi to 120 psi
642-3	Refrigerator	0 - 12 psi to 30 - 42 psi	75 psi to 110 psi
	Freezer	5” Vac - 1 psi to 6 - 12 psi	75 psi to 120 psi
650-3	Refrigerator	0 - 12 psi to 30 - 42 psi	75 psi to 110 psi
	Freezer	5” Vac - 1 psi to 6 - 12 psi	75 psi to 120 psi
650G-3	Refrigerator	0 - 12 psi to 30 - 42 psi	75 psi to 110 psi
	Freezer	5” Vac - 1 psi to 6 - 12 psi	75 psi to 120 psi
661-3	Refrigerator	0 - 12 psi to 30 - 42 psi	75 psi to 110 psi
	Freezer	5” Vac - 1 psi to 6 - 12 psi	75 psi to 120 psi
685-3	Refrigerator	0 - 12 psi to 30 - 42 psi	75 psi to 110 psi
	Freezer	5” Vac - 1 psi to 6 - 12 psi	75 psi to 120 psi
695-3	Refrigerator	0 - 12 psi to 30 - 42 psi	75 psi to 110 psi
	Freezer	5” Vac - 1 psi to 6 - 12 psi	75 psi to 120 psi

PRESSURE INDICATIONS		
If low-side pressure is	**& high-side pressure is**	**possible problem is**
NORMAL	NORMAL	MECHANICAL (see General Troubleshooting Guide)
LOW	LOW	LEAK
LOW	HIGH	RESTRICTION
HIGH	LOW	INEFFICIENT COMPRESSOR
HIGH	HIGH	OVER CHARGE

EVAPORATOR TEMPERATURE / SEALED SYSTEM LOW-SIDE PRESSURE CORRELATION

NOTE: The temperature/pressure table at right is for reference only. A unit's temperature/pressure correlation may differ from those listed due to: variations in evaporator thermistor location, set-points, where the sealed system is in the refrigeration cycle, ambient temperature, etc.
If a unit is experiencing temperature problems, it is recommended that you reference the General Troubleshooting Guide before accessing the sealed system. After all mechanical and electrical components have been ruled out, sealed system pressures can be checked by applying solder-on process valves and referencing the preceding page. Do NOT use bolt-on process valves as they are prone to leak.
This table should only be used as a last quick check before entering the sealed system.

Temperature	Pressure
-30°F (-34°C)	10” Vac
-25°F (-32°C)	7” Vac
-20°F (-29°C)	4” Vac
-15°F (-26°C)	0” Vac
-10°F (-23°C)	2 Psi
-5°F (-21°C)	4 Psi
0°F (-18°C)	7 Psi
5°F (-15°C)	9 Psi
10°F (-12°C)	12 Psi
15°F (-9°C)	15 Psi
20°F (-7°C)	18 Psi
25°F (-4°C)	22 Psi
30°F (-1°C)	26 Psi
35°F (2°C)	30 Psi
40°F (4°C)	35 Psi
45°F (7°C)	40 Psi
50°F (10°C)	45 Psi
55°F (13°C)	51 Psi
60°F (16°C)	57 Psi
65°F (18°C)	64 Psi
70°F (21°C)	71 Psi
75°F (24°C)	78 Psi

CONTROL PANEL MEMBRANE SWITCH / RIBBON CABLE TEST

If integrity of control panel assembly is suspect, perform continuity tests at membrane switch ribbon cable terminal housing. Begin by disconnecting ribbon cable from control board. Disengage control board from control panel. Remove control panel assembly from unit and place it on solid surface.

Pin 1 Identification Procedure

The ribbon cable wires are exposed at the back-side of the terminal housing. Pin 1 is labeled on the ribbon cable (see Figure 8-1). If Pin 1 is not labeled and if:

1. Terminal housing is blue, then Pin 1 is indicated by the arrow on the housing.
2. Terminal housing is black, then place ohm meter leads between 1st and 2nd pin from each end of the housing while pushing UNIT ON / OFF Key. When continuity is observed, pin 1 is at that end.

Continuity Test Procedure

1. Without pressing any of the keys on the membrane switch, check for continuity across all pin combinations. With no keys pressed, there should be no continuity between any two pins.
2. Identify model number being serviced in left column of table below.
3. Press key listed at top of table.
4. Corresponding numbers to right of model number and below key being pressed are the pin numbers on terminal housing that should have continuity.

   NOTE: *If any continuity tests show failure, replace entire control panel assembly.*

MODEL	UNIT ON/OFF KEY	ALARM (🔔) ON/OFF KEY	ICE ON/OFF KEY	REFRIG WARMER KEY	REFRIG COLDER KEY	FREEZER WARMER KEY	FREEZER COLDER KEY	BULK ICE KEY	LIGHTS ON/OFF KEY
601R-3	1 - 2	2 - 5	NA	3 - 4	4 - 5	NA	NA	NA	NA
601RG-3	1 - 2	2 - 5	NA	3 - 4	4 - 5	NA	NA	NA	2 - 3
601F-3	1 - 2	2 - 5	2 - 3	NA	NA	3 - 4	4 - 5	NA	NA
611-3	1 - 2	2 - 5	2 - 3	1 - 6	5 - 6	3 - 4	4 - 5	NA	NA
611G-3	1 - 2	2 - 3	2 - 5	3 - 4	4 - 5	1 - 6	5 - 6	NA	1 - 4
632-3	1 - 2	2 - 5	2 - 3	1 - 6	5 - 6	3 - 4	4 - 5	NA	NA
642-3	1 - 2	2 - 5	2 - 3	1 - 6	5 - 6	3 - 4	4 - 5	NA	NA
650-3	1 - 2	2 - 5	2 - 3	1 - 6	5 - 6	3 - 4	4 - 5	NA	NA
650G-3	1 - 2	2 - 3	2 - 5	3 - 4	4 - 5	1 - 6	5 - 6	NA	1 - 4
661-3	1 - 2	2 - 5	2 - 3	1 - 6	5 - 6	3 - 4	4 - 5	NA	NA
685-3	1 - 2	2 - 3	2 - 5	3 - 4	4 - 5	1 - 6	5 - 6	1 - 4	NA
695-3	1 - 2	2 - 3	2 - 5	3 - 4	4 - 5	1 - 6	5 - 6	1 - 4	NA

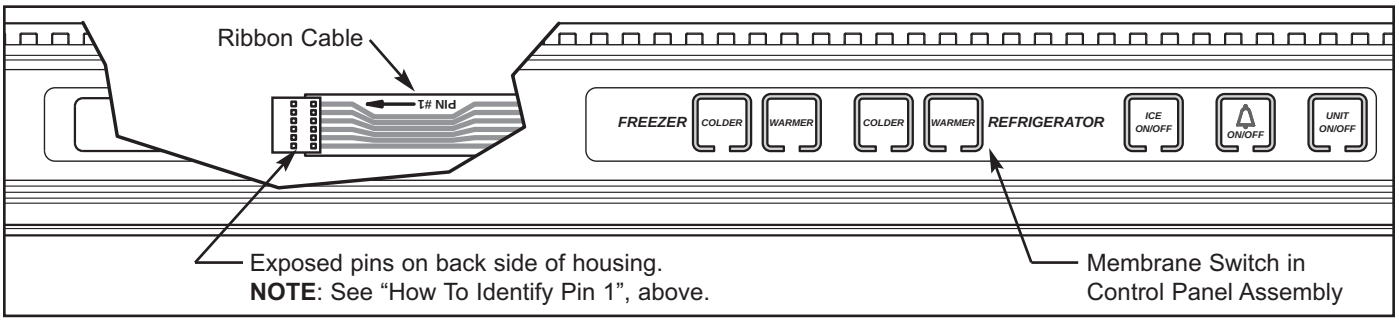

Figure 8-1. Control Panel Assy with Cut-Away View to Show Ribbon Cable *(Model 632 Control Panel Shown)*

Model 601R-3

	REFRIGERATOR
CHARGE (R-134a Refrigerant) *NOTE: Always check serial tag for exact charge*	7.5 oz.
NORMAL OPERATING PRESSURES Low Side High Side	 **0-12 psi to 30-42 psi** **75 psi to 110 psi**
COMPRESSOR *NOTE: Always check current parts price list for possible substitutions.* Service Part No. Manufacturer Mfg. Part No. Original Compressor / Service Compressor Amps Original Compressor / Service Compressor BTU's	 4201880 Embraco EMI30HER ~ 1.0 / ~1.1 345 / 280
DEFROST METHOD	"Off Cycle Defrost" Evap > 38°F before Compressor ON.
DEFROST TERMINATOR Cut-In Temp. Cut-Out Temp.	 ---- ----
DEFROST HEATER Watts Amps Ohms	 ---- ---- ----
DRAIN TUBE HEATER Watts Amps Ohms	 ---- ---- ----
FILL TUBE HEATER Watts Amps Ohms	 ---- ---- ----
WATER VALVE Watts Amps Ohms (Inductive)	 ---- ---- ----
THERMISTORS (Evap & Compartment) Ohms at 32°F / 0°C	 30000 - 33000

Model 601RG-3

	REFRIGERATOR
CHARGE (R-134a Refrigerant) *NOTE: Always check serial tag for exact charge*	7.5 oz.
NORMAL OPERATING PRESSURES	
Low Side	**0-12 psi to 30-42 psi**
High Side	**75 psi to 110 psi**
COMPRESSOR *NOTE: Always check current parts price list for possible substitutions.*	
Service Part No.	4201880
Manufacturer	Embraco
Mfg. Part No.	EMI30HER
Original Compressor / Service Compressor Amps	~ 1.0 / ~1.1
Original Compressor / Service Compressor BTU's	345 / 280
DEFROST METHOD	"Off Cycle Defrost" Evap > 38°F before Compressor ON.
DEFROST TERMINATOR	
Cut-In Temp.	----
Cut-Out Temp.	----
DEFROST HEATER	
Watts	----
Amps	----
Ohms	----
DRAIN TUBE HEATER	
Watts	----
Amps	----
Ohms	----
FILL TUBE HEATER	
Watts	----
Amps	----
Ohms	----
WATER VALVE	
Watts	----
Amps	----
Ohms (Inductive)	----
THERMISTORS (Evap & Compartment) Ohms at 32°F / 0°C	30000 - 33000
DOOR HEATER	
Watts	5
Amps	.04
Ohms	2500 - 2950

Model 601F-3

	FREEZER
CHARGE (R-134a Refrigerant) *NOTE: Always check serial tag for exact charge*	10.0 oz.
NORMAL OPERATING PRESSURES Low Side High Side	 5" vac-1 psi to 8-15 psi 75 psi to 120 psi
COMPRESSOR *NOTE: Always check current parts price list for possible substitutions.* Service Part No. Manufacturer Mfg. Part No. Original Compressor / Service Compressor Amps Original Compressor / Service Compressor BTU's	 7002026 Embraco EGX80HLC ~2.0 / ~2.0 820 / 820
DEFROST METHOD	"Adaptive Defrost" Intervals and duration varies. Followed by 5 min. compressor delay.
DEFROST TERMINATOR Cut-In Temp. Cut-Out Temp.	 30°F / -1°C 70°F / 21°C
DEFROST HEATER Watts Amps Ohms	 640 5.5 19 - 23
DRAIN TUBE HEATER Watts Amps Ohms	 7 .06 1800 - 2100
DRAIN TROUGH HEATER Watts Amps Ohms	 52 .45 240 - 280
FILL TUBE HEATER Watts Amps Ohms	 4.2 .04 3000 - 3500
WATER VALVE Watts Amps Ohms (Inductive)	 50 .4 160
THERMISTORS (Evap & Compartment) Ohms at 32°F / 0°C	30000 - 33000

Model 611-3

	REFRIGERATOR	FREEZER
CHARGE (R-134a Refrigerant) *NOTE: Always check serial tag for exact charge*	5.5 oz.	7.0 oz.
NORMAL OPERATING PRESSURES		
Low Side	**0-12 psi to 30-42 psi**	5" vac-1 psi to 8-15 psi
High Side	**75 psi to 110 psi**	75 psi to 120 psi
COMPRESSOR *NOTE: Always check current parts price list for possible substitutions.*		
Service Part No.	4201880	4202280
Manufacturer	Embraco	Embraco
Mfg. Part No.	EMI30HER	EMI60HER
Original Compressor / Service Compressor Amps	~ 1.0 / ~1.1	~1.2 / ~1.2
Original Compressor / Service Compressor BTU's	345 / 280	605 / 605
DEFROST METHOD	"Off Cycle Defrost" Evap > 38°F before Compressor ON.	"Adaptive Defrost" Intervals and duration varies. Followed by 5 min. compressor delay.
DEFROST TERMINATOR		
Cut-In Temp.	----	30°F / -1°C
Cut-Out Temp.	----	55°F / 13°C
DEFROST HEATER		
Watts	----	640
Amps	----	5.5
Ohms	----	19 - 23
DRAIN TUBE HEATER		
Watts	----	----
Amps	----	----
Ohms	----	----
DRAIN TROUGH HEATER		
Watts	----	----
Amps	----	----
Ohms	----	----
FILL TUBE HEATER		
Watts	----	5
Amps	----	.04
Ohms	----	3000 - 3500
WATER VALVE		
Watts	----	50
Amps	----	.4
Ohms (Inductive)	----	160
THERMISTORS (Evap & Compartment) Ohms at 32°F / 0°C	30000 - 33000	30000 - 33000

Model 611G-3

	REFRIGERATOR	FREEZER
CHARGE (R-134a Refrigerant) *NOTE: Always check serial tag for exact charge*	6 oz.	7 oz.
NORMAL OPERATING PRESSURES		
Low Side	**0-12 psi to 30-42 psi**	5" vac-1 psi to 8-15 psi
High Side	**75 psi to 110 psi**	75 psi to 120 psi
COMPRESSOR *NOTE: Always check current parts price list for possible substitutions.*		
Service Part No.	4201880	4202280
Manufacturer	Embraco	Embraco
Mfg. Part No.	EMI30HER	EMI60HER
Original Compressor / Service Compressor Amps	~ 1.0 / ~1.1	~1.2 / ~1.2
Original Compressor / Service Compressor BTU's	345 / 280	605 / 605
DEFROST METHOD	"Off Cycle Defrost" Evap > 38°F before Compressor ON.	"Adaptive Defrost" Intervals and duration varies. Followed by 5 min. compressor delay.
DEFROST TERMINATOR		
Cut-In Temp.	----	30°F / -1°C
Cut-Out Temp.	----	55°F / 13°C
DEFROST HEATER		
Watts	----	640
Amps	----	5.5
Ohms	----	19 - 23
DRAIN TUBE HEATER		
Watts	----	----
Amps	----	----
Ohms	----	----
DRAIN TROUGH HEATER		
Watts	----	----
Amps	----	----
Ohms	----	----
FILL TUBE HEATER		
Watts	----	4.2
Amps	----	.04
Ohms	----	3000 - 3500
WATER VALVE		
Watts	----	50
Amps	----	.4
Ohms (Inductive)	----	160
THERMISTORS (Evap & Compartment) Ohms at 32°F / 0°C	30000 - 33000	30000 - 33000
DOOR HEATER		
Watts	5	----
Amps	.04	----
Ohms	2500 - 2950	----

Model 632-3

	REFRIGERATOR	FREEZER
CHARGE (R-134a Refrigerant) *NOTE: Always check serial tag for exact charge*	5.5 oz.	7.0 oz.
NORMAL OPERATING PRESSURES Low Side High Side	 **0-12 psi to 30-42 psi** **75 psi to 110 psi**	 5" vac-1 psi to 8-15 psi 75 psi to 120 psi
COMPRESSOR *NOTE: Always check current parts price list for possible substitutions.* Service Part No. Manufacturer Mfg. Part No. Original Compressor / Service Compressor Amps Original Compressor / Service Compressor BTU's	 4201880 Embraco EMI30HER ~ 1.0 / ~1.1 345 / 280	 4202280 Embraco EMI60HER ~1.2 / ~1.2 605 / 605
DEFROST METHOD	"Off Cycle Defrost" Evap > 38°F before Compressor ON.	"Adaptive Defrost" Intervals and duration varies. Followed by 5 min. compressor delay.
DEFROST TERMINATOR Cut-In Temp. Cut-Out Temp.	 ---- ----	 30°F / -1°C 55°F / 13°C
DEFROST HEATER Watts Amps Ohms	 ---- ---- ----	 640 5.5 19 - 23
DRAIN TUBE HEATER Watts Amps Ohms	 ---- ---- ----	 7 .06 1800 - 2100
DRAIN TROUGH HEATER Watts Amps Ohms	 ---- ---- ----	 ---- ---- ----
FILL TUBE HEATER Watts Amps Ohms	 ---- ---- ----	 4.2 .04 3000 - 3500
WATER VALVE Watts Amps Ohms (Inductive)	 ---- ---- ----	 50 .4 160
THERMISTORS (Evap & Compartment) Ohms at 32°F / 0°C	30000 - 33000	30000 - 33000

Model 642-3

	REFRIGERATOR	FREEZER
CHARGE (R-134a Refrigerant) *NOTE: Always check serial tag for exact charge*	5.5 oz.	7.0 oz.
NORMAL OPERATING PRESSURES		
Low Side	**0-12 psi to 30-42 psi**	5" vac-1 psi to 8-15 psi
High Side	**75 psi to 110 psi**	75 psi to 120 psi
COMPRESSOR *NOTE: Always check current parts price list for possible substitutions.*		
Service Part No.	4201880	4202280
Manufacturer	Embraco	Embraco
Mfg. Part No.	EMI30HER	EMI60HER
Original Compressor / Service Compressor Amps	~ 1.0 / ~1.1	~1.2 / ~1.2
Original Compressor / Service Compressor BTU's	345 / 280	605 / 605
DEFROST METHOD	"Off Cycle Defrost" Evap > 38°F before Compressor ON.	"Adaptive Defrost" Intervals and duration varies. Followed by 5 min. compressor delay.
DEFROST TERMINATOR		
Cut-In Temp.	----	30°F / -1°C
Cut-Out Temp.	----	55°F / 13°C
DEFROST HEATER		
Watts	----	640
Amps	----	5.5
Ohms	----	19 - 23
DRAIN TUBE HEATER		
Watts	----	7
Amps	----	.06
Ohms	----	1800 - 2100
DRAIN TROUGH HEATER		
Watts	----	----
Amps	----	----
Ohms	----	----
FILL TUBE HEATER		
Watts	----	4.2
Amps	----	.04
Ohms	----	3000 - 3500
WATER VALVE		
Watts	----	50
Amps	----	.4
Ohms (Inductive)	----	160
THERMISTORS (Evap & Compartment) Ohms at 32°F / 0°C	30000 - 33000	30000 - 33000

Model 650-3

	REFRIGERATOR	FREEZER
CHARGE (R-134a Refrigerant) *NOTE: Always check serial tag for exact charge*	5.5 oz	6.0 oz.
NORMAL OPERATING PRESSURES Low Side High Side	 **0-12 psi to 30-42 psi** **75 psi to 110 psi**	 5" vac-1 psi to 8-15 psi 75 psi to 120 psi
COMPRESSOR *NOTE: Always check current parts price list for possible substitutions.* Service Part No. Manufacturer Mfg. Part No. Original Compressor / Service Compressor Amps Original Compressor / Service Compressor BTU's	 4201880 Embraco EMI30HER ~ 1.0 / ~1.1 345 / 280	 4202280 Embraco EMI60HER ~1.2 / ~1.2 605 / 605
DEFROST METHOD	"Off Cycle Defrost" Evap > 38°F before Compressor ON.	"Adaptive Defrost" Intervals and duration varies. Followed by 5 min. compressor delay.
DEFROST TERMINATOR Cut-In Temp. Cut-Out Temp.	 ---- ----	 30°F / -1°C 55°F / 13°C
DEFROST HEATER Watts Amps Ohms	 ---- ---- ----	 640 5.5 19 - 23
DRAIN TUBE HEATER Watts Amps Ohms	 ---- ---- ----	 ---- ---- ----
DRAIN TROUGH HEATER Watts Amps Ohms	 ---- ---- ----	 ---- ---- ----
FILL TUBE HEATER Watts Amps Ohms	 ---- ---- ----	 5 .04 3000 - 3500
WATER VALVE Watts Amps Ohms (Inductive)	 ---- ---- ----	 50 .4 160
THERMISTORS (Evap & Compartment) Ohms at 32°F / 0°C	30000 - 33000	30000 - 33000

Model 650G-3

	REFRIGERATOR	FREEZER
CHARGE (R-134a Refrigerant) *NOTE: Always check serial tag for exact charge*	4.5 oz.	6.0 oz.
NORMAL OPERATING PRESSURES		
Low Side	**0-12 psi to 30-42 psi**	5" vac-1 psi to 8-15 psi
High Side	**75 psi to 110 psi**	75 psi to 120 psi
COMPRESSOR *NOTE: Always check current parts price list for possible substitutions.*		
Service Part No.	4201880	4202280
Manufacturer	Embraco	Embraco
Mfg. Part No.	EMI30HER	EMI60HER
Original Compressor / Service Compressor Amps	~ 1.0 / ~1.1	~1.2 / ~1.2
Original Compressor / Service Compressor BTU's	345 / 280	605 / 605
DEFROST METHOD	"Off Cycle Defrost" Evap > 38°F before Compressor ON.	"Adaptive Defrost" Intervals and duration varies. Followed by 5 min. compressor delay.
DEFROST TERMINATOR		
Cut-In Temp.	----	30°F / -1°C
Cut-Out Temp.	----	55°F / 13°C
DEFROST HEATER		
Watts	----	640
Amps	----	5.5
Ohms	----	19 - 23
DRAIN TUBE HEATER		
Watts	----	----
Amps	----	----
Ohms	----	----
DRAIN TROUGH HEATER		
Watts	----	----
Amps	----	----
Ohms	----	----
FILL TUBE HEATER		
Watts	----	4.2
Amps	----	.04
Ohms	----	3000 - 3500
WATER VALVE		
Watts	----	50
Amps	----	.4
Ohms (Inductive)	----	160
THERMISTORS (Evap & Compartment) Ohms at 32°F / 0°C	30000 - 33000	30000 - 33000
DOOR HEATER		
Watts	5	----
Amps	.04	----
Ohms	2500 - 2950	----

Model 661-3

	REFRIGERATOR	FREEZER
CHARGE (R-134a Refrigerant) *NOTE: Always check serial tag for exact charge*	3.5 oz.	7.0 oz.
NORMAL OPERATING PRESSURES		
Low Side	**0-12 psi to 30-42 psi**	5" vac-1 psi to 8-15 psi
High Side	**75 psi to 110 psi**	75 psi to 120 psi
COMPRESSOR *NOTE: Always check current parts price list for possible substitutions.*		
Service Part No.	4201880	7002026
Manufacturer	Embraco	Embraco
Mfg. Part No.	EMI30HER	EGX80HLC
Original Compressor / Service Compressor Amps	~ 1.0 / ~1.1	~2.0 / ~2.0
Original Compressor / Service Compressor BTU's	345 / 280	820 / 820
DEFROST METHOD	"Off Cycle Defrost" Evap > 38°F before Compressor ON.	"Adaptive Defrost" Intervals and duration varies. Followed by 5 min. compressor delay.
DEFROST TERMINATOR		
Cut-In Temp.	----	30°F / -1°C
Cut-Out Temp.	----	55°F / 13°C
DEFROST HEATER		
Watts	----	640
Amps	----	5.5
Ohms	----	19 - 23
DRAIN TUBE HEATER		
Watts	----	7
Amps	----	.06
Ohms	----	1800 - 2100
DRAIN TROUGH HEATER		
Watts	----	----
Amps	----	----
Ohms	----	----
FILL TUBE HEATER		
Watts	----	4.2
Amps	----	.04
Ohms	----	3000 - 3500
WATER VALVE		
Watts	----	50
Amps	----	.4
Ohms (Inductive)	----	160
THERMISTORS (Evap & Compartment) Ohms at 32°F / 0°C	30000 - 33000	30000 - 33000

Model 685-3

		REFRIGERATOR	FREEZER
CHARGE (R-134a Refrigerant) *NOTE: Always check serial tag for exact charge*		4.5 oz.	7.0 oz.
NORMAL OPERATING PRESSURES	Low Side High Side	**0-12 psi to 30-42 psi** **75 psi to 110 psi**	5" vac-1 psi to 8-15 psi 75 psi to 120 psi
COMPRESSOR *NOTE: Always check current parts price list for possible substitutions.*	Service Part No. Manufacturer Mfg. Part No. Original Compressor / Service Compressor Amps Original Compressor / Service Compressor BTU's	4201880 Embraco EMI30HER ~ 1.0 / ~1.1 345 / 280	4202280 Embraco EMI60HER ~1.2 / ~1.2 605 / 605
DEFROST METHOD		"Off Cycle Defrost" Evap > 38°F before Compressor ON.	"Adaptive Defrost" Intervals and duration varies. Followed by 5 min. compressor delay.
DEFROST TERMINATOR	Cut-In Temp. Cut-Out Temp.	---- ----	30°F / -1°C 55°F / 13°C
DEFROST HEATER	Watts Amps Ohms	---- ---- ----	450 3.9 28 - 31
DRAIN TUBE HEATER	Watts Amps Ohms	---- ---- ----	---- ---- ----
DRAIN TROUGH HEATER	Watts Amps Ohms	---- ---- ----	---- ---- ----
FILL TUBE HEATER	Watts Amps Ohms	---- ---- ----	4.2 .04 3000 - 3500
WATER VALVE	Watts Amps Ohms (Inductive)	20 .2 260	50 .4 160
THERMISTORS (Evap & Compartment)	Ohms at 32°F / 0°C	30000 - 33000	30000 - 33000
MULLION CHUTE HEATER	Watts Amps Ohms	15 .13 800 - 980	---- ---- ----
GLASS WELL HEATER	Watts Amps (Heater 1) Ohms (Heater 2) Ohms	5 .04 1200 - 1470 3150 - 3680	---- ---- ---- ----

Model 695-3

		REFRIGERATOR	FREEZER
CHARGE (R-134a Refrigerant) *NOTE: Always check serial tag for exact charge*		4.5 oz.	7.0 oz
NORMAL OPERATING PRESSURES	Low Side High Side	**0-12 psi to 30-42 psi** **75 psi to 110 psi**	5" vac-1 psi to 8-15 psi 75 psi to 120 psi
COMPRESSOR *NOTE: Always check current parts price list for possible substitutions.*	Service Part No. Manufacturer Mfg. Part No. Original Compressor/Service Compressor Amps Original Compressor/Service Compressor BTU's	4201880 Embraco EMI30HER ~ 1.0 / ~1.1 345 / 280	4202280 Embraco EMI60HER ~1.2 / ~1.2 605 / 605
DEFROST METHOD		"Off Cycle Defrost" Evap > 38°F before Compressor ON.	"Adaptive Defrost" Intervals and duration varies. Followed by 5 min. compressor delay.
DEFROST TERMINATOR	Cut-In Temp. Cut-Out Temp.	---- ----	30°F / -1°C 55°F / 13°C
DEFROST HEATER	Watts Amps Ohms	---- ---- ----	450 3.9 28 - 31
DRAIN TUBE HEATER	Watts Amps Ohms	---- ---- ----	---- ---- ----
DRAIN TROUGH HEATER	Watts Amps Ohms	---- ---- ----	---- ---- ----
FILL TUBE HEATER	Watts Amps Ohms	---- ---- ----	4.2 .04 3000 - 3500
WATER VALVE	Watts Amps Ohms (Inductive)	20 .2 260	50 .4 160
THERMISTORS (Evap & Compartment)	Ohms at 32°F / 0°C	30000 - 33000	30000 - 33000
MULLION CHUTE HEATER	Watts Amps Ohms (Inductive)	15 .13 800 - 980	---- ---- ----
GLASS WELL HEATER	Watts Amps (Heater 1) Ohms (Heater 2) Ohms	5 .04 1200 - 1470 3150 - 3680	---- ---- ---- ----

P/N 7001945 REV A

WIRING DIAGRAM

MODEL: 601R-3

WARNING

- This wiring information is provided for use by qualified service personnel only.
- Disconnect appliance from electrical supply before beginning service.
- Be sure all grounding devices are connected when service is complete.
- Failure to observe the above warnings may result in severe electrical shock.

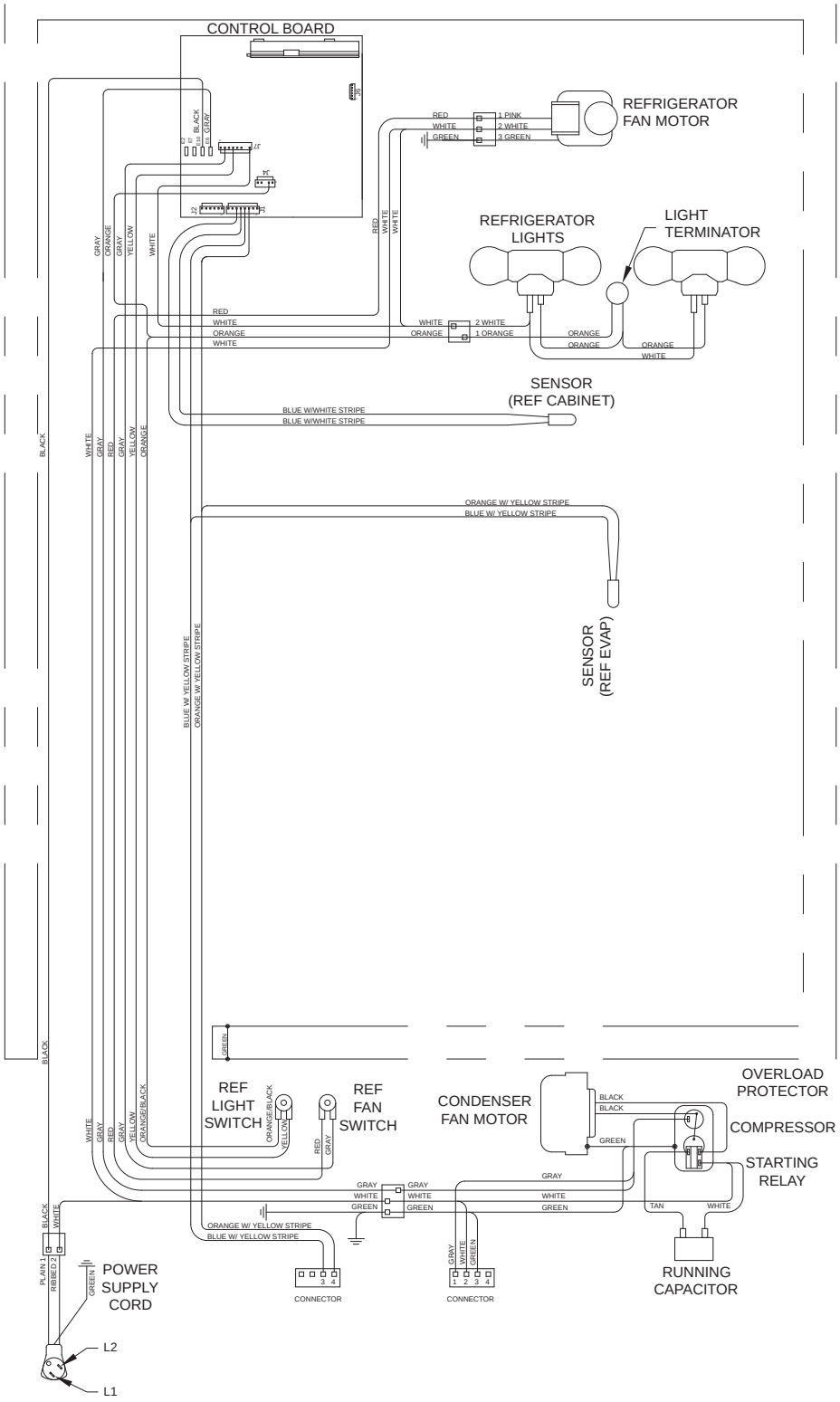

CONTROL BOARD DETAIL

CONTROL BOARD SUMMARY

CIRCUIT	DESCRIPTION	FUNCTION	COLOR
	120 VOLT CIRCUITS		
E2	DEF HTR	NOT USED	
E7	FCOMP	NOT USED	
E10	L1	POWER IN	BLACK
E6	RCOMP	REF COMPRESSOR	GRAY
		POWERS REF COMPRESSOR AND CONDENSER FAN	
J7-1	C FAN	NOT USED	
J7-2	E FAN	POWERS REF EVAP FAN	GRAY
J7-3		NOT USED	
J7-4	LITES	POWERS LIGHTS	YELLOW
J7-5		NOT USED	
J7-6		NOT USED	
J7-7		NOT USED(NO PIN)	
J7-8	NEU	NEUTRAL INTO BOARD	WHITE
J4-1		NOT USED	ORANGE
J4-2		REF DOOR LIGHT SENSE	
J4-3		NOT USED(NO PIN)	
J4-4		NOT USED	
J4-5		NOT USED	
	LOW VOLTAGE THERMISTOR CIRCUITS		
J1-1		NOT USED	
J1-2		NOT USED	
J1-3		REF EVAP	ORANGE/YLW
J1-4		REF EVAP	BLUE/YLW
J1-5		REF COMPARTMENT	BLUE/WHITE
J1-6		REF COMPARTMENT	BLUE/WHITE
J1-7		NOT USED	
J1-8		NOT USED	

SENSES REF EVAP TEMP	
SENSES REF EVAP TEMP	
SENSES REF CABINET TEMP	
SENSES REF CABINET TEMP	

P/N 7001945 REV A

WIRING SCHEMATIC MODEL: 601R-3

WARNING

- This wiring information is provided for use by qualified service personnel only.
- Disconnect appliance from electrical supply before beginning service.
- Be sure all grounding devices are connected when service is complete.
- Failure to observe the above warnings may result in severe electrical shock.

HIGH VOLTAGE WIRING SCHEMATIC

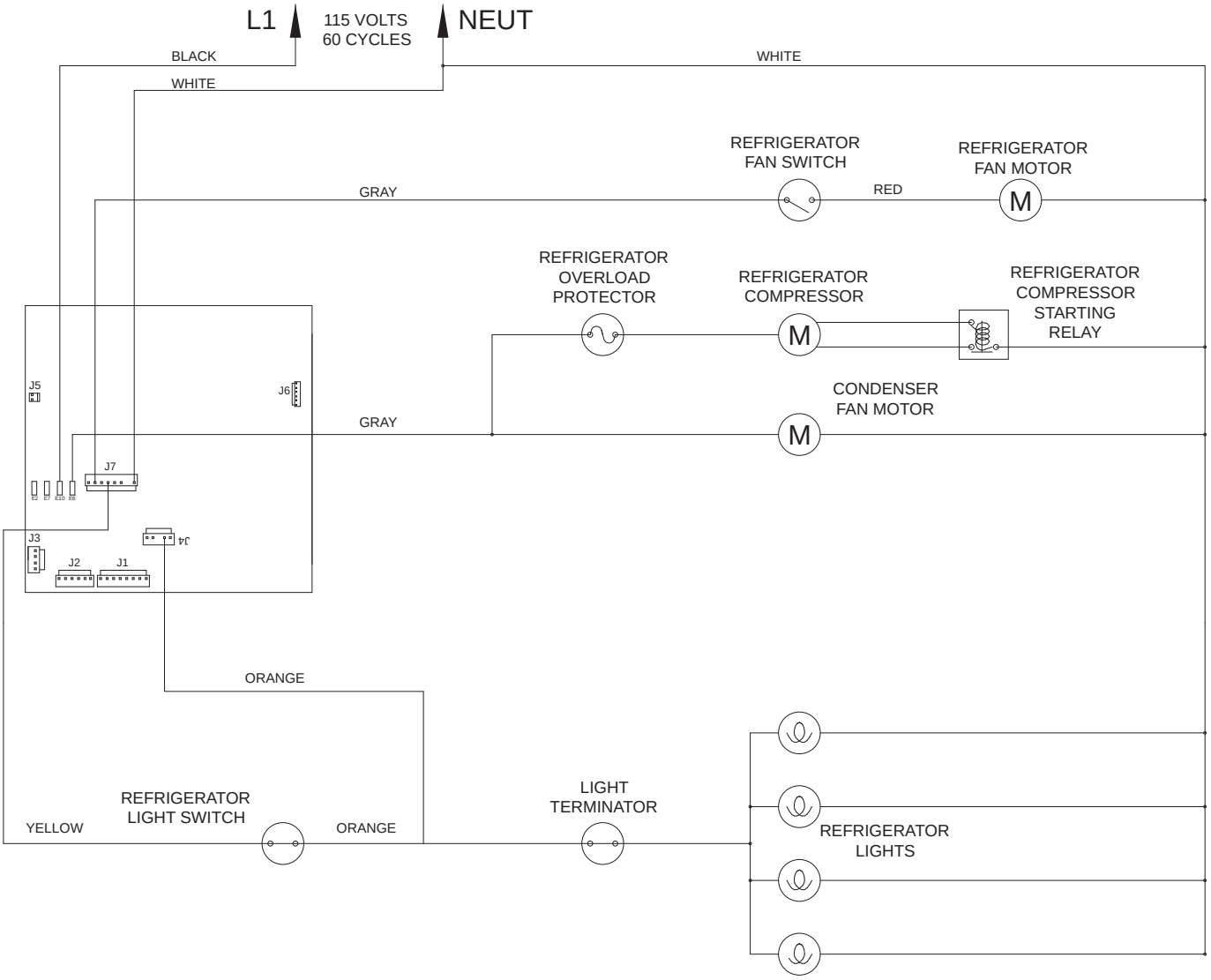

WIRING DIAGRAM
MODEL: 601RG-3

⚠ WARNING

- This wiring information is provided for use by qualified service personnel only.
- Disconnect appliance from electrical supply before beginning service.
- Be sure all grounding devices are connected when service is complete.
- Failure to observe the above warnings may result in severe electrical shock.

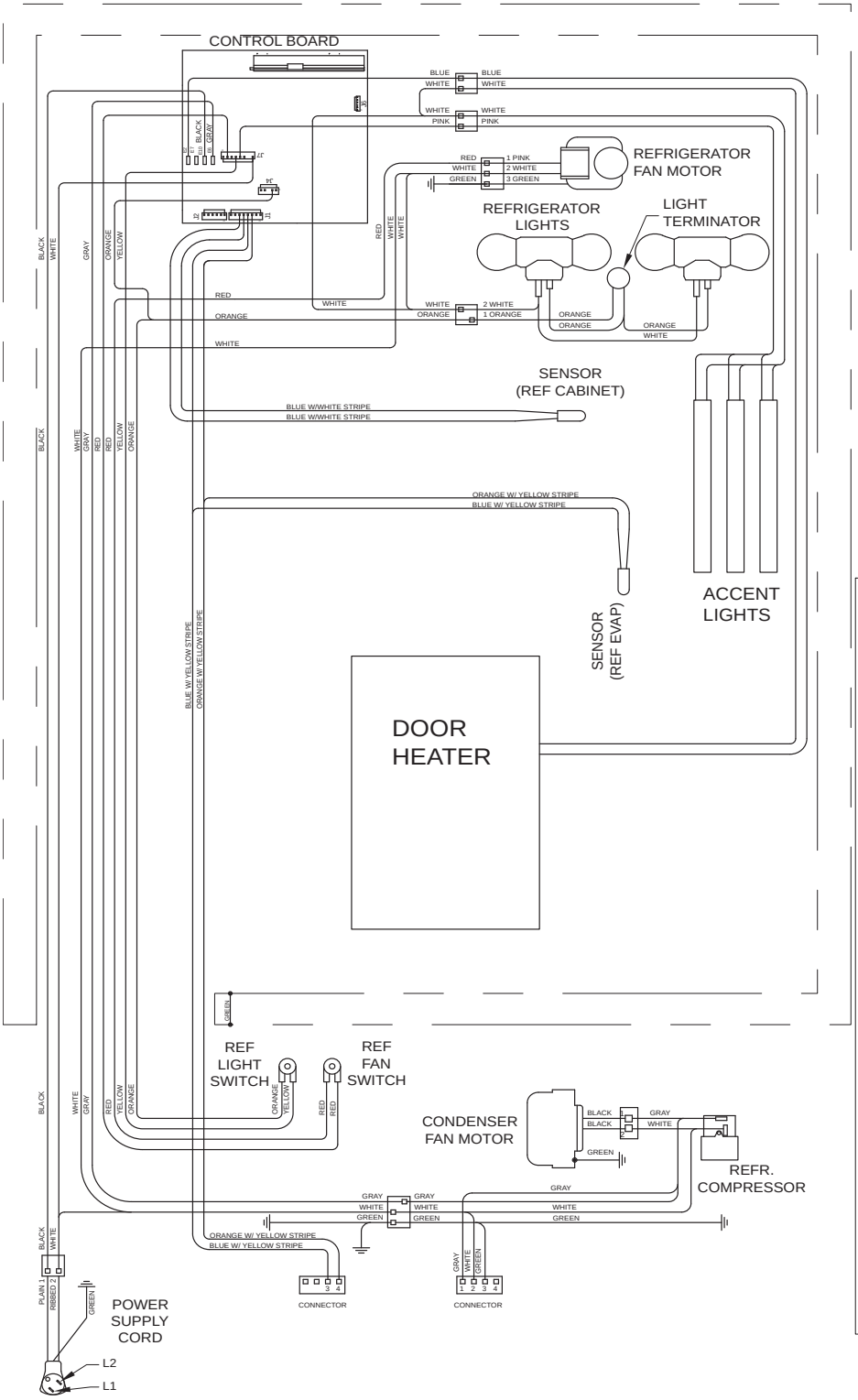

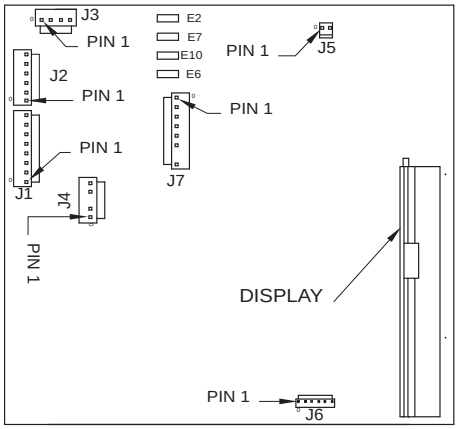

CONTROL BOARD DETAIL

CONTROL BOARD SUMMARY

CIRCUIT	DESCRIPTION	FUNCTION	COLOR
	120 VOLT CIRCUITS		
E2	DEF HTR	DOOR HEATER	POWERS DOOR HEATER	BLUE
E7	FCOMP	NOT USED	
E10	L1	POWER IN	POWER INTO BOARD	BLACK
E6	RCOMP	REF COMPRESSOR	POWERS REF COMPRESSOR AND CONDENSER FAN	GRAY
J7-1	C FAN	NOT USED	
J7-2	E FAN	REF EVAP FAN	POWERS REF EVAP FAN	RED
J7-3	NOT USED		
J7-4	LITES	LIGHTS	POWERS LIGHTS	YELLOW
J7-5	ICE	ACCENT LIGHTS		PINK
J7-6	NOT USED		
J7-7	NOT USED(NO PIN)		
J7-8	NEU	NEUTRAL	NEUTRAL INTO BOARD	WHITE
J4-1	NOT USED			ORANGE
J4-2	REF DOOR LIGHT SENSE	SENSES IF REF DOOR OPEN	
J4-3	NOT USED(NO PIN)		
J4-4	NOT USED		
J4-5	NOT USED		
	LOW VOLTAGE THERMISTOR CIRCUITS		
J1-1	NOT USED		
J1-2	NOT USED		
J1-3	REF EVAP	SENSES REF EVAP TEMP	ORANGE/YLW
J1-4	REF EVAP	SENSES REF EVAP TEMP	BLUE/YLW
J1-5	REF COMPARTMENT	SENSES REF CABINET TEMP	BLUE/WHITE
J1-6	REF COMPARTMENT	SENSES REF CABINET TEMP	BLUE/WHITE
J1-7	NOT USED		
J1-8	NOT USED		

PART NUMBER 7001949 REV A

WIRING SCHEMATIC MODEL: 601RG-3

WARNING

- This wiring information is provided for use by qualified service personnel only.
- Disconnect appliance from electrical supply before beginning service.
- Be sure all grounding devices are connected when service is complete.
- Failure to observe the above warnings may result in severe electrical shock.

HIGH VOLTAGE WIRING SCHEMATIC

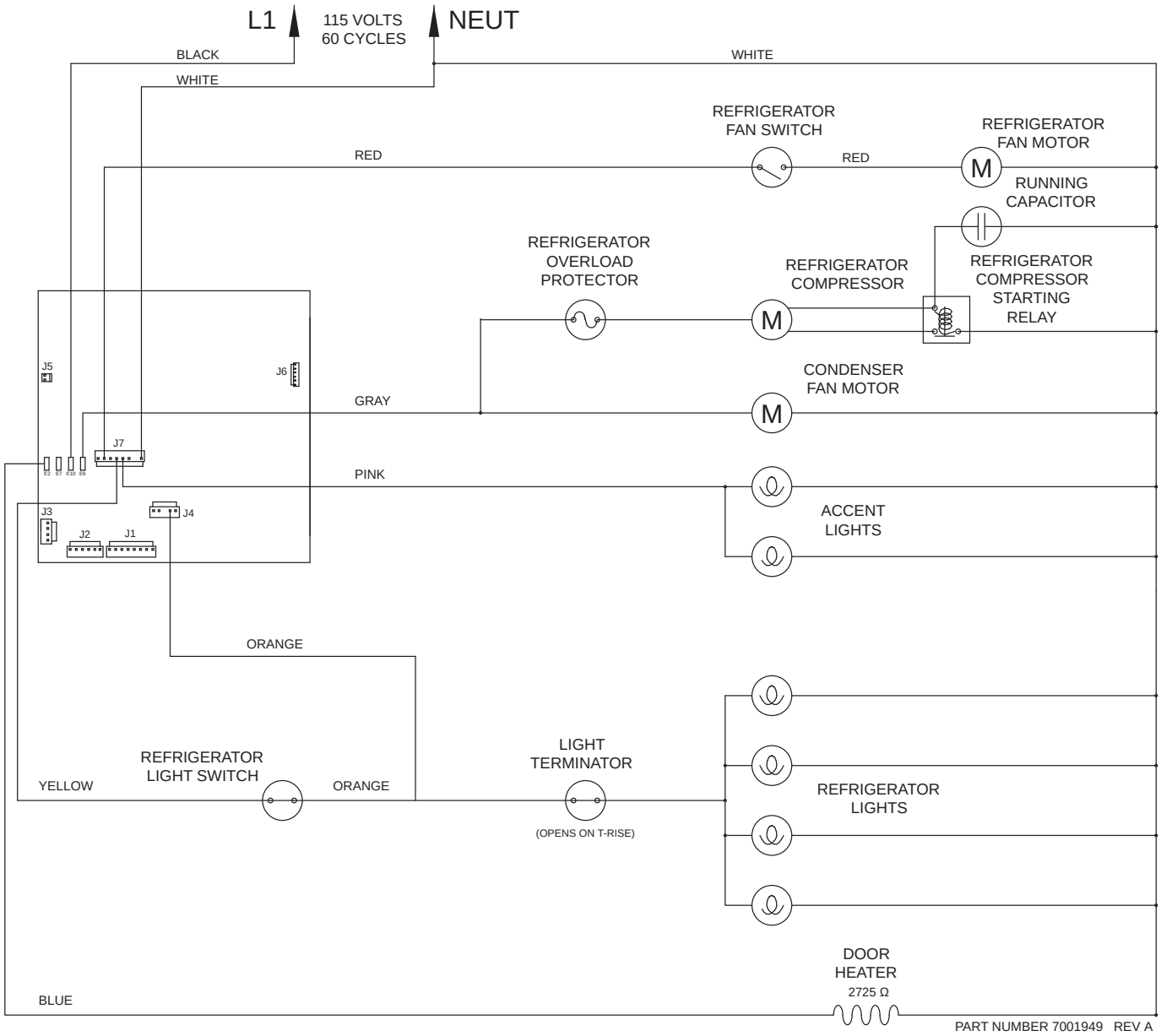

WIRING DIAGRAM
MODEL: 601F-3

⚠ WARNING

- This wiring information is provided for use by qualified service personnel only.
- Disconnect appliance from electrical supply before beginning service.
- Be sure all grounding devices are connected when service is complete.
- Failure to observe the above warnings may result in severe electrical shock.

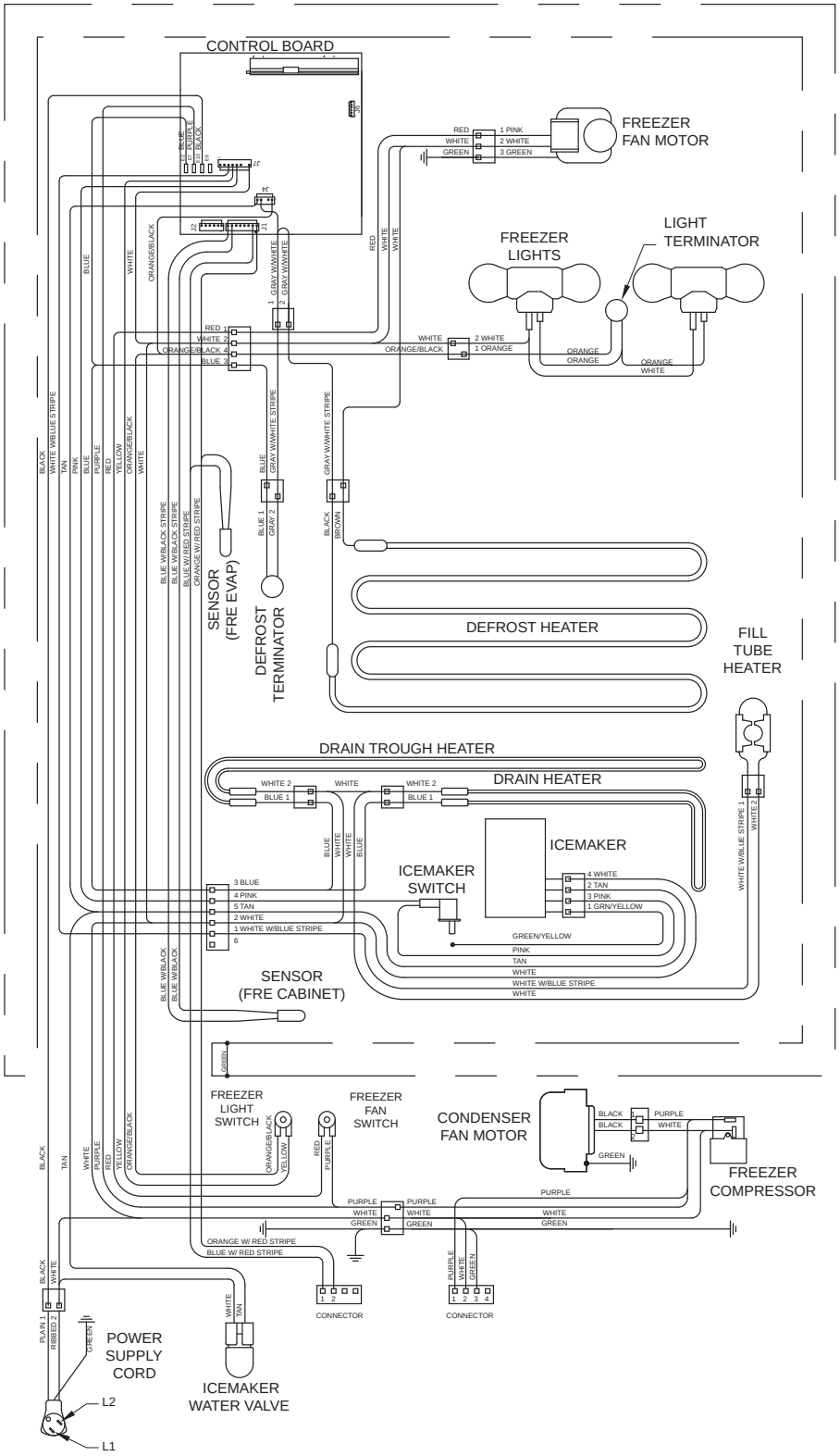

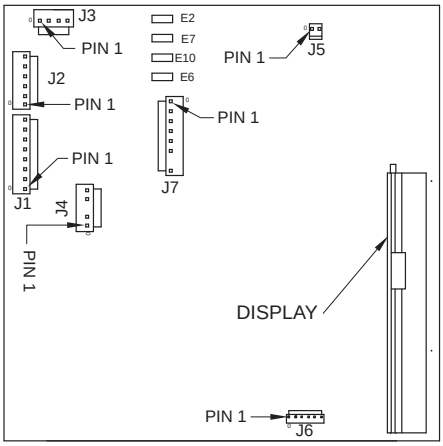

CONTROL BOARD DETAIL

CONTROL BOARD SUMMARY

CIRCUIT	DESCRIPTION	FUNCTION	COLOR
		120 VOLT CIRCUITS	
E2	DEF HTR	POWERS DEFROST CIRCUIT	BLUE
E7	FCOMP	FRZ COMPRESSOR	PURPLE
E10	L1	POWER IN	BLACK
E6	RCOMP	NOT USED	
J7-1	C FAN	NOT USED	
J7-2	E FAN	NOT USED	
J7-3		ICE MAKER ACC (FILL TUBE)	POWERS FILL TUBE HEATER AND ACCESSORIES	WHITE/BLUE
J7-4	LITES	LIGHTS	POWERS LIGHTS	YELLOW
J7-5		ICE MAKER	POWERS ICE MAKER	PINK
J7-6		NOT USED		
J7-7		NOT USED(NO PIN)		
J7-8	NEU	NEUTRAL	NEUTRAL INTO BOARD	WHITE
J4-1		FRZ DOOR LIGHT SENSE	SENSES IF FRZ DOOR OPEN	ORANGE/BLACK
J4-2		NOT USED		
J4-3		NOT USED(NO PIN)		
J4-4		DEF SENSOR	SENSES WHEN DEF HEATER SHUTS OFF	GRAY/WHITE
J4-5		ICE MAKER VALVE SENSOR	SENSES WATER VALVE ACTIVATION	TAN
		LOW VOLTAGE THERMISTOR CIRCUITS		
J1-1		FRZ EVAP	SENSES FRZ EVAP TEMP	ORANGE/RED
J1-2		FRZ EVAP	SENSES FRZ EVAP TEMP	BLUE/RED
J1-3		NOT USED		
J1-4		NOT USED		
J1-5		NOT USED		
J1-6		NOT USED		
J1-7		FRZ COMPARTMENT	SENSES FRZ CABINET TEMP	BLUE/BLACK
J1-8		FRZ COMPARTMENT	SENSES FRZ CABINET TEMP	BLUE/BLACK

PART NUMBER 7002529 REV A

WIRING SCHEMATIC MODEL: 601F-3

⚠ WARNING

- This wiring information is provided for use by qualified service personnel only.
- Disconnect appliance from electrical supply before beginning service.
- Be sure all grounding devices are connected when service is complete.
- Failure to observe the above warnings may result in severe electrical shock.

HIGH VOLTAGE WIRING SCHEMATIC

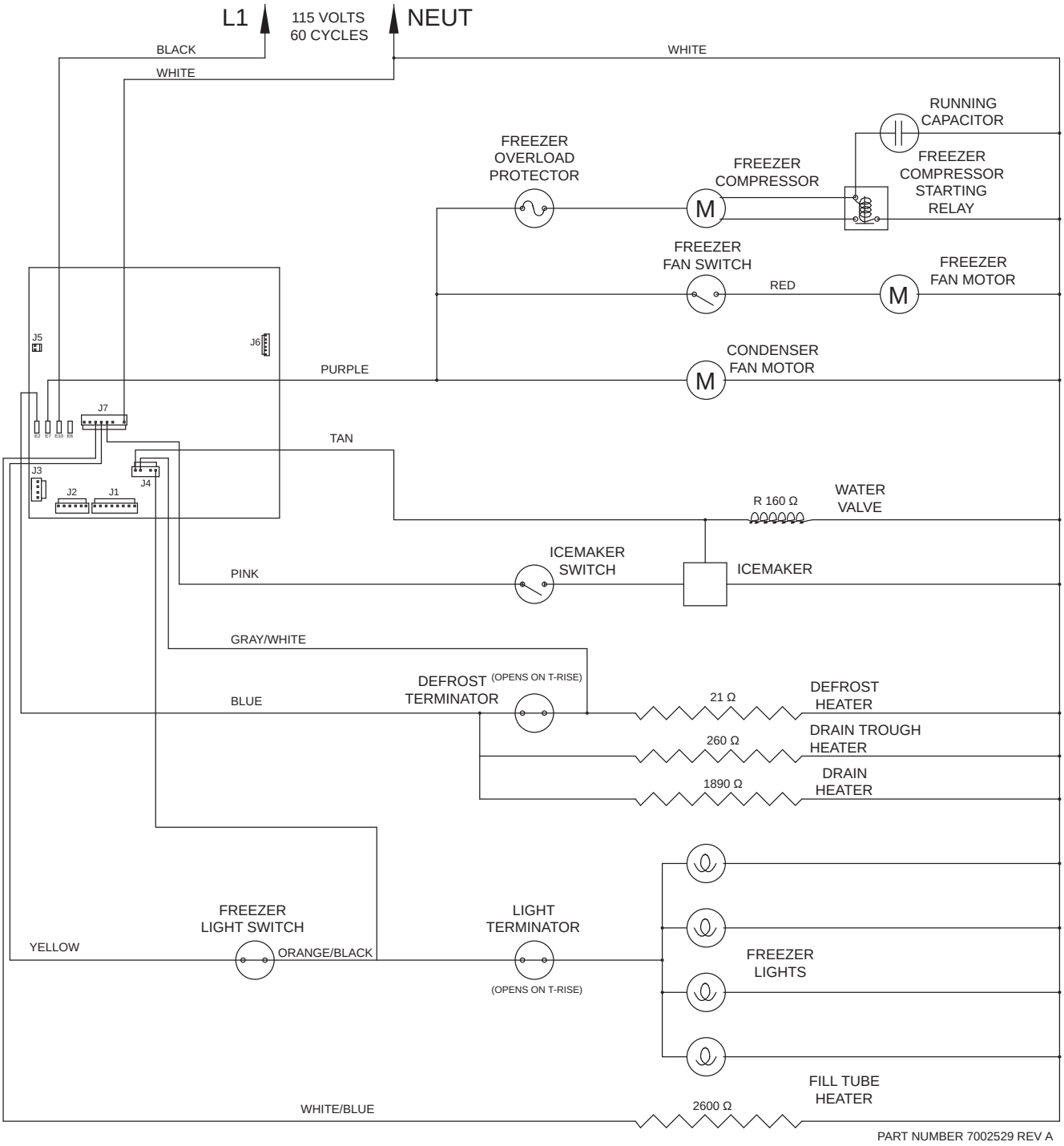

PART NUMBER 7002529 REV A

WIRING DIAGRAM
MODELS: 611-3 & 650-3

WARNING

- This wiring information is provided for use by qualified service personnel only.
- Disconnect appliance from electrical supply before beginning service.
- Be sure all grounding devices are connected when service is complete.
- Failure to observe the above warnings may result in severe electrical shock.

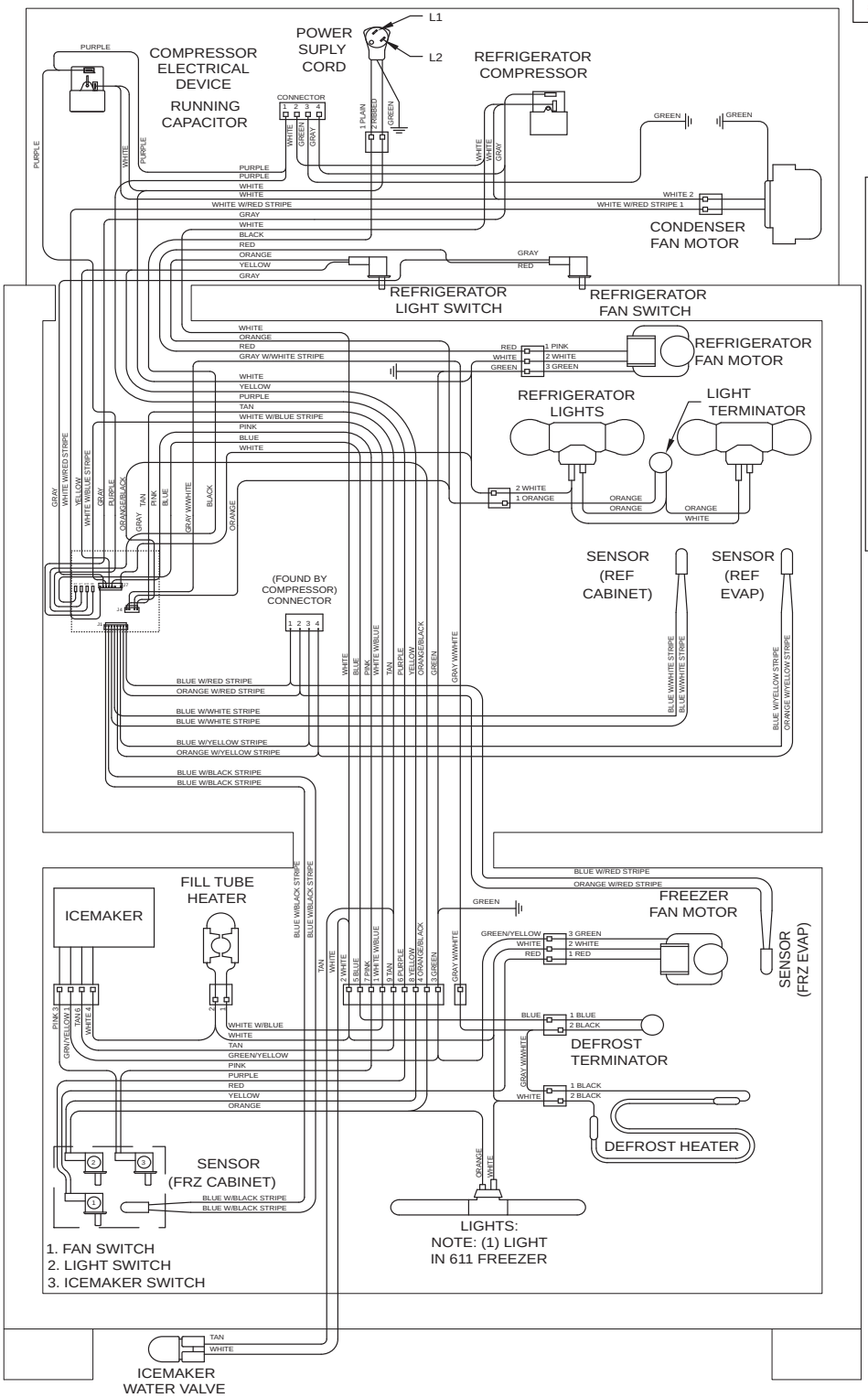

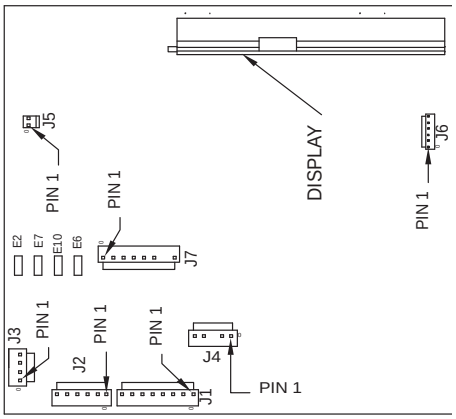

CONTROL BOARD SUMMARY

CIRCUIT	DESCRIPTION	FUNCTION	COLOR
	120 VOLT CIRCUITS		
E2	DEF HTR	POWERS DEFROST CIRCUIT	BLUE
E7	FCOMP	POWERS FRZ COMPRESSOR	PURPLE
E10	RV COMP	POWERS REF REVERSING VALVE	BLACK
E6	RCOMP	POWERS REF COMPRESSOR	GRAY
J7-1	C FAN	POWERS CONDENSER FAN	WHITE/RED
J7-2	E FAN	POWERS REF EVAP FAN	GRAY
J7-3	LITE	POWERS FILL TUBE HEATER AND ACCESSORIES	WHITE/BLUE
J7-4		POWERS LIGHTS	YELLOW
J7-5		POWERS ICE MAKER	PINK
J7-6		NOT USED (NO PIN)	
J7-7		NOT USED (NO PIN)	
J7-8	NEU	NEUTRAL INTO BOARD	WHITE
J4-1		FRZ DOOR LIGHT SENSE	BROWN
J4-2		REF DOOR LIGHT SENSE	ORANGE/BLACK
J4-3		NOT USED (NO PIN)	
J4-4		DEF SENSOR	GRAY/WHITE
J4-5		DEF WATER VALVE SENSOR	TAN
	LOW VOLTAGE THERMISTOR CIRCUITS		
J1-1		FRZ EVAP	ORANGE/RED
J1-2		FRZ EVAP	BLUE/RED
J1-3		REF EVAP	ORANGE/YELLOW
J1-4		REF EVAP	BLUE/YELLOW
J1-5		REF COMPARTMENT	BLUE/WHITE
J1-6		REF COMPARTMENT	BLUE/BLACK
J1-7		FRZ COMPARTMENT	BLUE/BLACK
J1-8		FRZ COMPARTMENT	BLUE/BLACK

P/N 7001676 REV B

WIRING SCHEMATIC
MODELS: 611-3 & 650-3

WARNING

-This wiring information is provided for use by qualified service personnel only.
-Disconnect appliance from electrical supply before beginning service.
-Be sure all grounding devices are connected when service is complete.
-Failure to observe the above warnings may result in severe electrical shock.

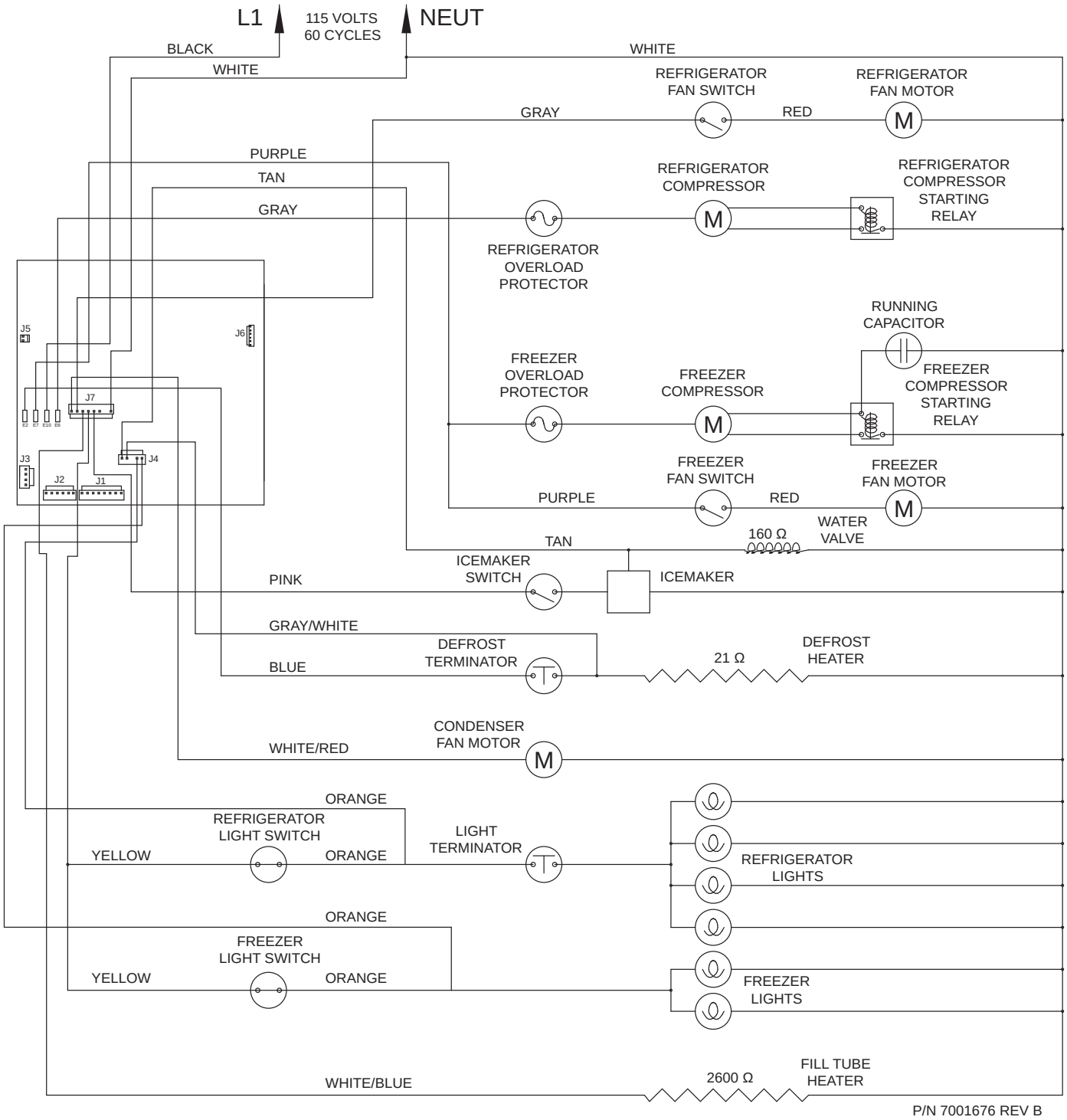

P/N 7001676 REV B

WIRING DIAGRAM
MODELS: 611G-3 & 650G-3

WARNING

- This wiring information is provided for use by qualified service personnel only.
- Disconnect appliance from electrical supply before beginning service.
- Be sure all grounding devices are connected when service is complete.
- Failure to observe the above warnings may result in severe electrical shock.

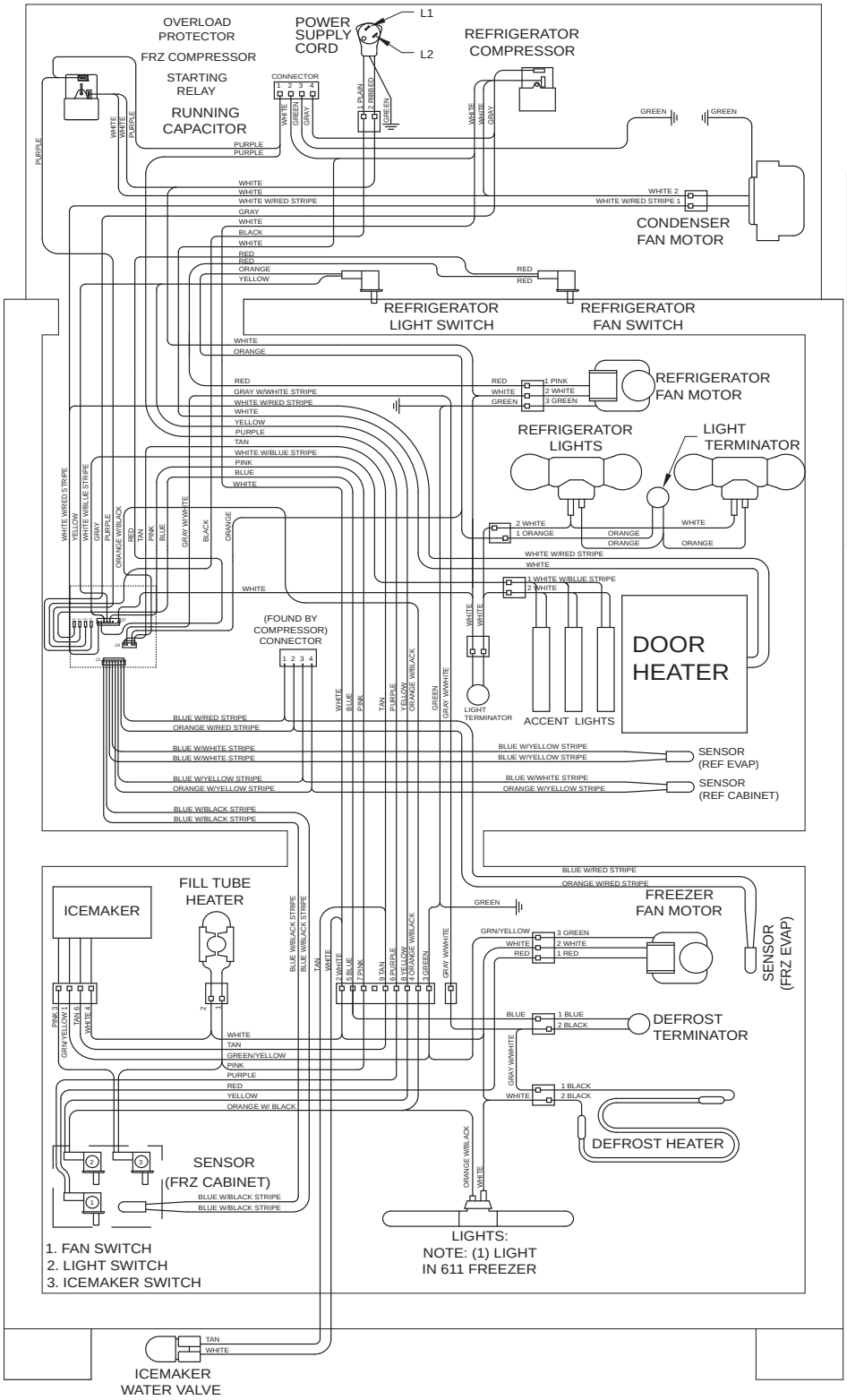

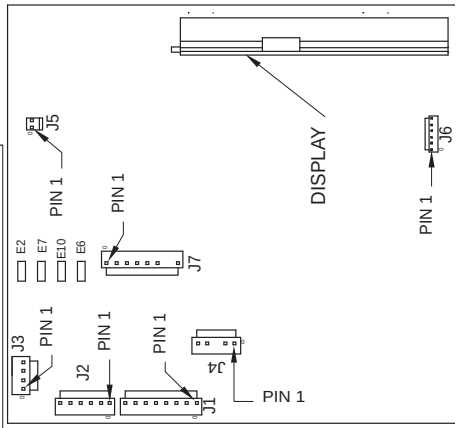

CONTROL BOARD SUMMARY

CIRCUIT	DESCRIPTION	FUNCTION	COLOR
	120 VOLT CIRCUITS		
E2	DEF HTR	POWERS DEFROST CIRCUIT	BLUE
E7	FCOMP	POWERS FRZ COMPRESSOR	PURPLE
E10	FCOND	POWERS FRZ COND FAN	BLACK
E6	RCOMP	POWERS REF COMPRESSOR	GRAY
J7-1	C FAN	POWERS CONDENSER FAN AND DOOR HEATER	WHITE/RED
J7-2	E FAN	POWERS REF EVAP FAN	RED
J7-3	IACC	POWERS ACCENT LIGHTS	WHITE/BLUE
J7-4	LITE	POWERS LIGHTS	YELLOW
J7-5	ICE	POWERS ICE MAKER AND FILL TUBE HEATER	PINK
J7-6			
J7-7	NOT USED(NO PIN)		
J7-8	NEU	NEUTRAL INTO BOARD	WHITE
J4-1	FDR	SENSES IF FRZ DOOR OPEN	ORANGE W/BLACK
J4-2	RDR	SENSES IF REF DOOR OPEN	ORANGE
J4-3		NOT USED(NO PIN)	
J4-4	DEF SENSOR	SENSES WHEN DEF HEATER SHUTS OFF	GRAY/WHITE
J4-5	ICE MAKER WATER VALVE SENSOR	SENSES WATER VALVE ACTIVATION	TAN
	LOW VOLTAGE THERMISTOR CIRCUITS		
J1-1	FRZ EVAP	SENSES FRZ EVAP TEMP	ORANGE/RED
J1-2	FRZ EVAP	SENSES FRZ EVAP TEMP	BLUE/RED
J1-3	REF EVAP	SENSES REF EVAP TEMP	ORANGE/YELLOW
J1-4	REF EVAP	SENSES REF EVAP TEMP	BLUE/YELLOW
J1-5	REF COMPARTMENT	SENSES REF CABINET	BLUE/WHITE
J1-6	REF COMPARTMENT	SENSES REF CABINET	ORANGE/WHITE
J1-7	FRZ COMPARTMENT	SENSES FRZ CABINET TEMP	BLUE/BLACK
J1-8	FRZ COMPARTMENT	SENSES FRZ CABINET TEMP	BLUE/BLACK

P/N 7001764 REV B

WIRING SCHEMATIC
MODELS: 611G-3/650G-3

WARNING

- This wiring information is provided for use by qualified service personnel only.
- Disconnect appliance from electrical supply before beginning service.
- Be sure all grounding devices are connected when service is complete.
- Failure to observe the above warnings may result in severe electrical shock.

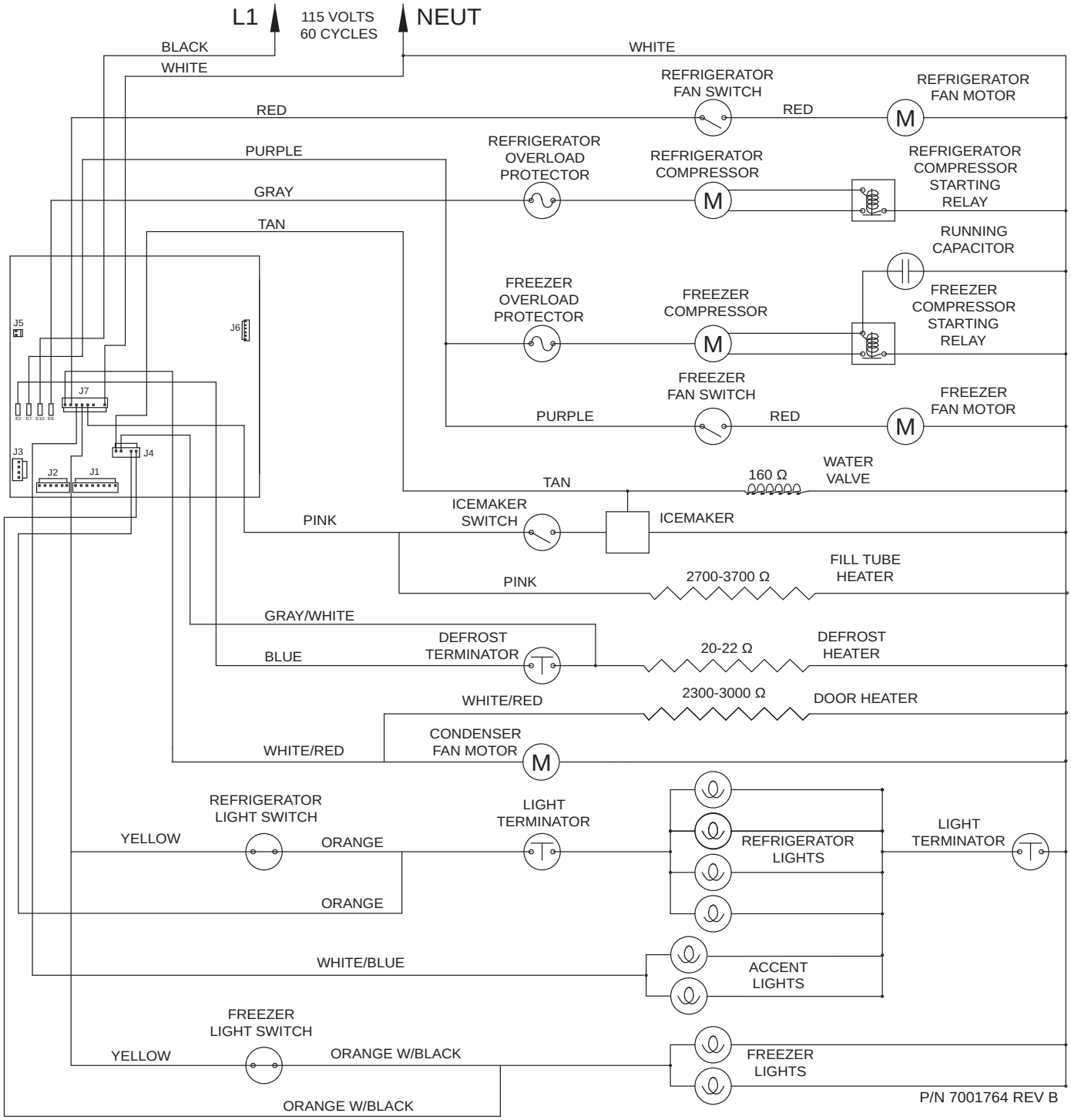

P/N 7003701 REV A

WIRING DIAGRAM
MODELS: 632-3/642-3

WARNING

-This wiring information is provided for use by qualified service personnel only.
-Disconnect appliance from electrical supply before beginning service.
-Be sure all grounding devices are connected when service is complete.
-Failure to observe the above warnings may result in severe electrical shock.

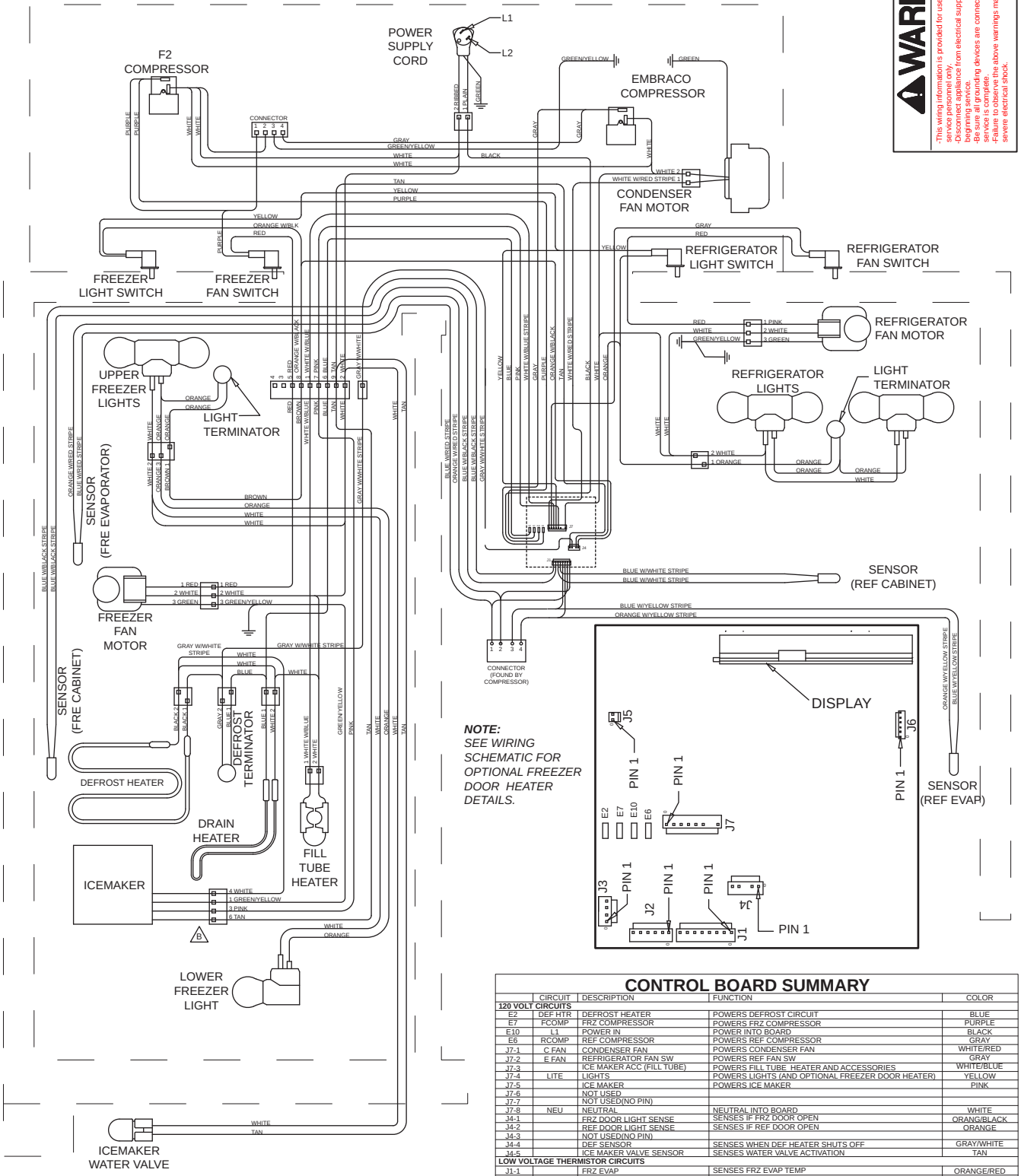

NOTE:
SEE WIRING SCHEMATIC FOR OPTIONAL FREEZER DOOR HEATER DETAILS.

CONTROL BOARD SUMMARY

	CIRCUIT	DESCRIPTION	FUNCTION	COLOR
120 VOLT CIRCUITS				
E2	DEF HTR	DEFROST HEATER	POWERS DEFROST CIRCUIT	BLUE
E7	FCOMP	FRZ COMPRESSOR	POWERS FRZ COMPRESSOR	PURPLE
E10	L1	POWER IN	POWER INTO BOARD	BLACK
E6	RCOMP	REF COMPRESSOR	POWERS REF COMPRESSOR	GRAY
J7-1	C FAN	CONDENSER FAN	POWERS CONDENSER FAN	WHITE/RED
J7-2	E FAN	REFRIGERATOR FAN SW	POWERS REF FAN SW	GRAY
J7-3		ICE MAKER ACC (FILL TUBE)	POWERS FILL TUBE HEATER AND ACCESSORIES	WHITE/BLUE
J7-4	LITE	LIGHTS	POWERS LIGHTS (AND OPTIONAL FREEZER DOOR HEATER)	YELLOW
J7-5		ICE MAKER	POWERS ICE MAKER	PINK
J7-6		NOT USED		
J7-7		NOT USED(NO PIN)		
J7-8	NEU	NEUTRAL	NEUTRAL INTO BOARD	WHITE
J4-1		FRZ DOOR LIGHT SENSE	SENSES IF FRZ DOOR OPEN	ORANG/BLACK
J4-2		REF DOOR LIGHT SENSE	SENSES IF REF DOOR OPEN	ORANGE
J4-3		NOT USED(NO PIN)		
J4-4		DEF SENSOR	SENSES WHEN DEF HEATER SHUTS OFF	GRAY/WHITE
J4-5		ICE MAKER VALVE SENSOR	SENSES WATER VALVE ACTIVATION	TAN
LOW VOLTAGE THERMISTOR CIRCUITS				
J1-1		FRZ EVAP	SENSES FRZ EVAP TEMP	ORANGE/RED
J1-2		FRZ EVAP	SENSES FRZ EVAP TEMP	BLUE/RED
J1-3		REF EVAP	SENSES REF EVAP TEMP	ORANGE/YELLOW
J1-4		REF EVAP	SENSES REF EVAP TEMP	BLUE/YELLOW
J1-5		REF COMPARTMENT	SENSES REF CABINET	BLUE/WHITE
J1-6		REF COMPARTMENT	SENSES REF CABINET	BLUE/WHITE
J1-7		FRZ COMPARTMENT	SENSES FRZ CABINET TEMP	BLUE/BLACK
J1-8		FRZ COMPARTMENT	SENSES FRZ CABINET TEMP	BLUE/BLACK

P/N 7003701 REV A

WIRING SCHEMATIC
MODELS: 632-3/642-3

WARNING

- This wiring information is provided for use by qualified service personnel only.
- Disconnect appliance from electrical supply before beginning service.
- Be sure all grounding devices are connected when service is complete.
- Failure to observe the above warnings may result in severe electrical shock.

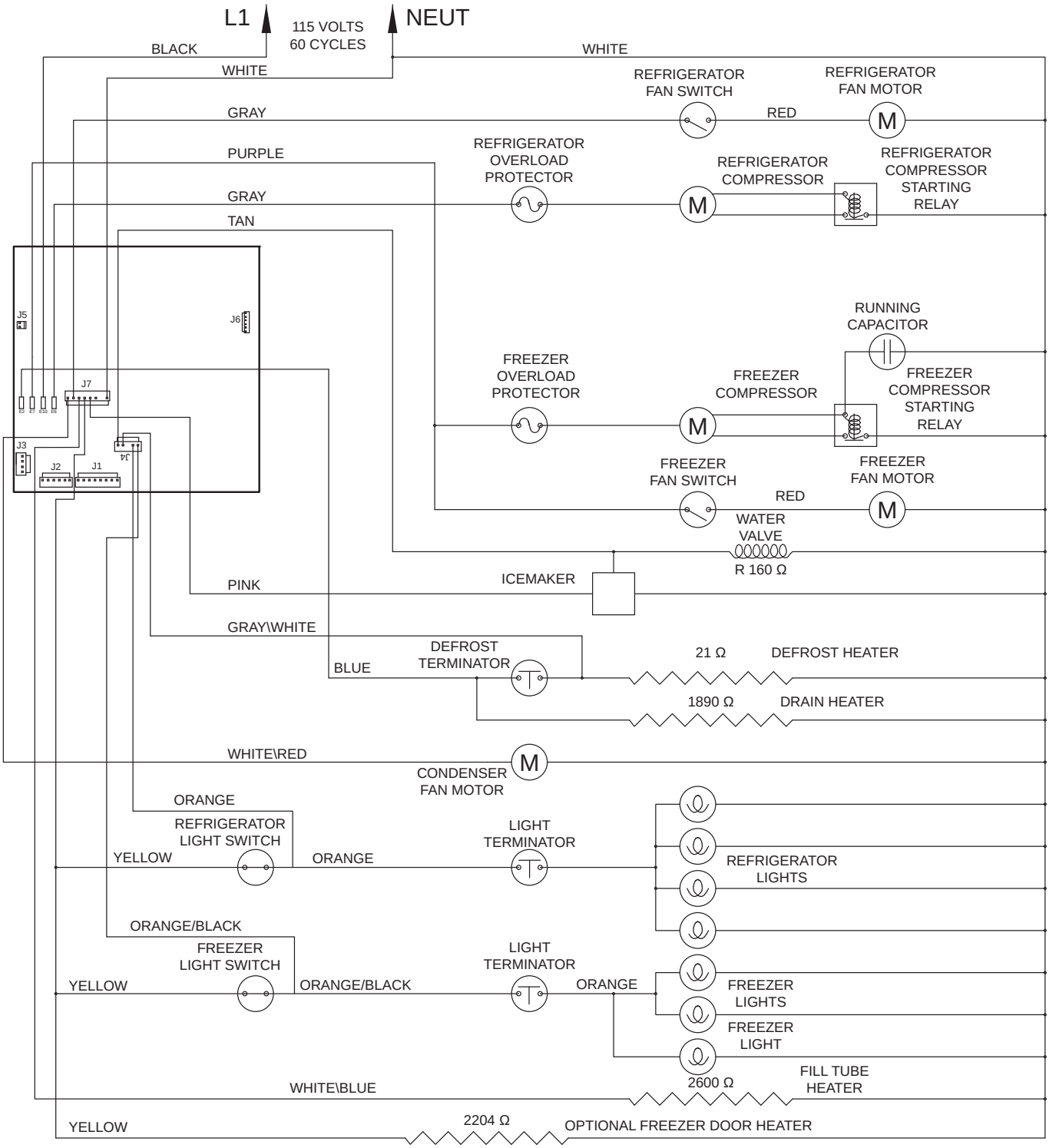

P/N 7003703 REV A

WIRING DIAGRAM
MODEL: 661-3

⚠ WARNING

- This wiring information is provided for use by qualified service personnel only.
- Disconnect appliance from electrical supply before beginning service.
- Be sure all grounding devices are connected when service is complete.
- Failure to observe the above warnings may result in severe electrical shock.

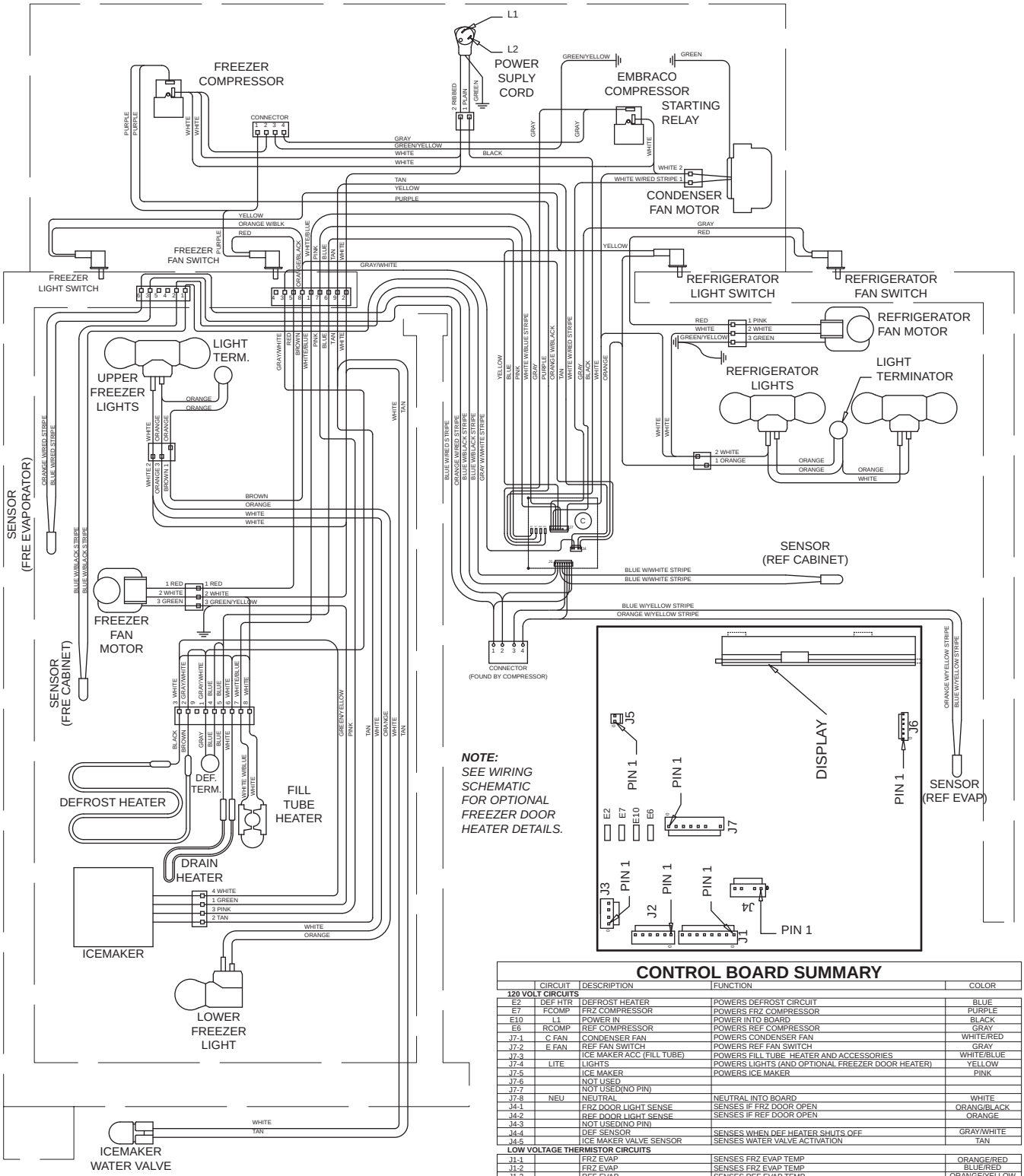

NOTE:
SEE WIRING SCHEMATIC FOR OPTIONAL FREEZER DOOR HEATER DETAILS.

CONTROL BOARD SUMMARY

	CIRCUIT	DESCRIPTION	FUNCTION	COLOR
120 VOLT CIRCUITS				
E2	DEF HTR	DEFROST HEATER	POWERS DEFROST CIRCUIT	BLUE
E7	FCOMP	FRZ COMPRESSOR	POWERS FRZ COMPRESSOR	PURPLE
E10	L1	POWER IN	POWER INTO BOARD	BLACK
E6	RCOMP	REF COMPRESSOR	POWERS REF COMPRESSOR	GRAY
J7-1	C FAN	CONDENSER FAN	POWERS CONDENSER FAN	WHITE/RED
J7-2	E FAN	REF FAN SWITCH	POWERS REF FAN SWITCH	GRAY
J7-3		ICE MAKER ACC (FILL TUBE)	POWERS FILL TUBE HEATER AND ACCESSORIES	WHITE/BLUE
J7-4	LITE	LIGHTS	POWERS LIGHTS (AND OPTIONAL FREEZER DOOR HEATER)	YELLOW
J7-5		ICE MAKER	POWERS ICE MAKER	PINK
J7-6		NOT USED		
J7-7		NOT USED(NO PIN)		
J7-8	NEU	NEUTRAL	NEUTRAL INTO BOARD	WHITE
J4-1		FRZ DOOR LIGHT SENSE	SENSES IF FRZ DOOR OPEN	ORANG/BLACK
J4-2		REF DOOR LIGHT SENSE	SENSES IF REF DOOR OPEN	ORANGE
J4-3		NOT USED(NO PIN)		
J4-4		DEF SENSOR	SENSES WHEN DEF HEATER SHUTS OFF	GRAY/WHITE
J4-5		ICE MAKER VALVE SENSOR	SENSES WATER VALVE ACTIVATION	TAN
LOW VOLTAGE THERMISTOR CIRCUITS				
J1-1		FRZ EVAP	SENSES FRZ EVAP TEMP	ORANGE/RED
J1-2		FRZ EVAP	SENSES FRZ EVAP TEMP	BLUE/RED
J1-3		REF EVAP	SENSES REF EVAP TEMP	ORANGE/YELLOW
J1-4		REF EVAP	SENSES REF EVAP TEMP	BLUE/YELLOW
J1-5		REF COMPARTMENT	SENSES REF CABINET	BLUE/WHITE
J1-6		REF COMPARTMENT	SENSES REF CABINET	BLUE/WHITE
J1-7		FRZ COMPARTMENT	SENSES FRZ CABINET TEMP	BLUE/BLACK
J1-8		FRZ COMPARTMENT	SENSES FRZ CABINET TEMP	BLUE/BLACK

P/N 7003703 REV A

WIRING SCHEMATIC
MODEL: 661-3

WARNING

- This wiring information is provided for use by qualified service personnel only.
- Disconnect appliance from electrical supply before beginning service.
- Be sure all grounding devices are connected when service is complete.
- Failure to observe the above warnings may result in severe electrical shock.

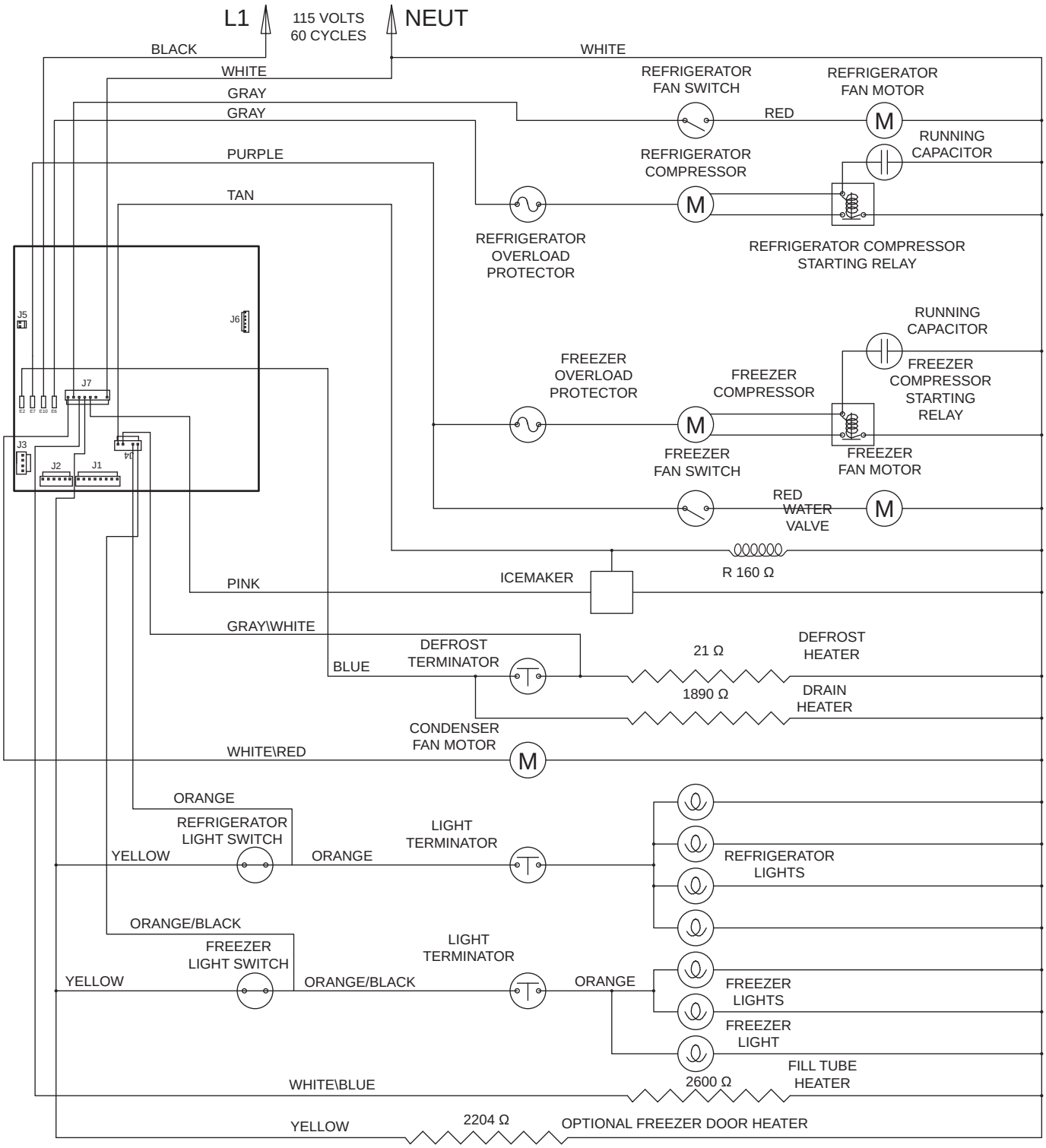

P/N 7003702 REV A

WIRING DIAGRAM
MODELS: 685-3/695-3

WARNING

- This wiring information is provided for use by qualified service personnel only.
- Disconnect appliance from electrical supply before beginning service.
- Be sure all grounding devices are connected when service is complete.
- Failure to observe the above warnings may result in severe electrical shock.

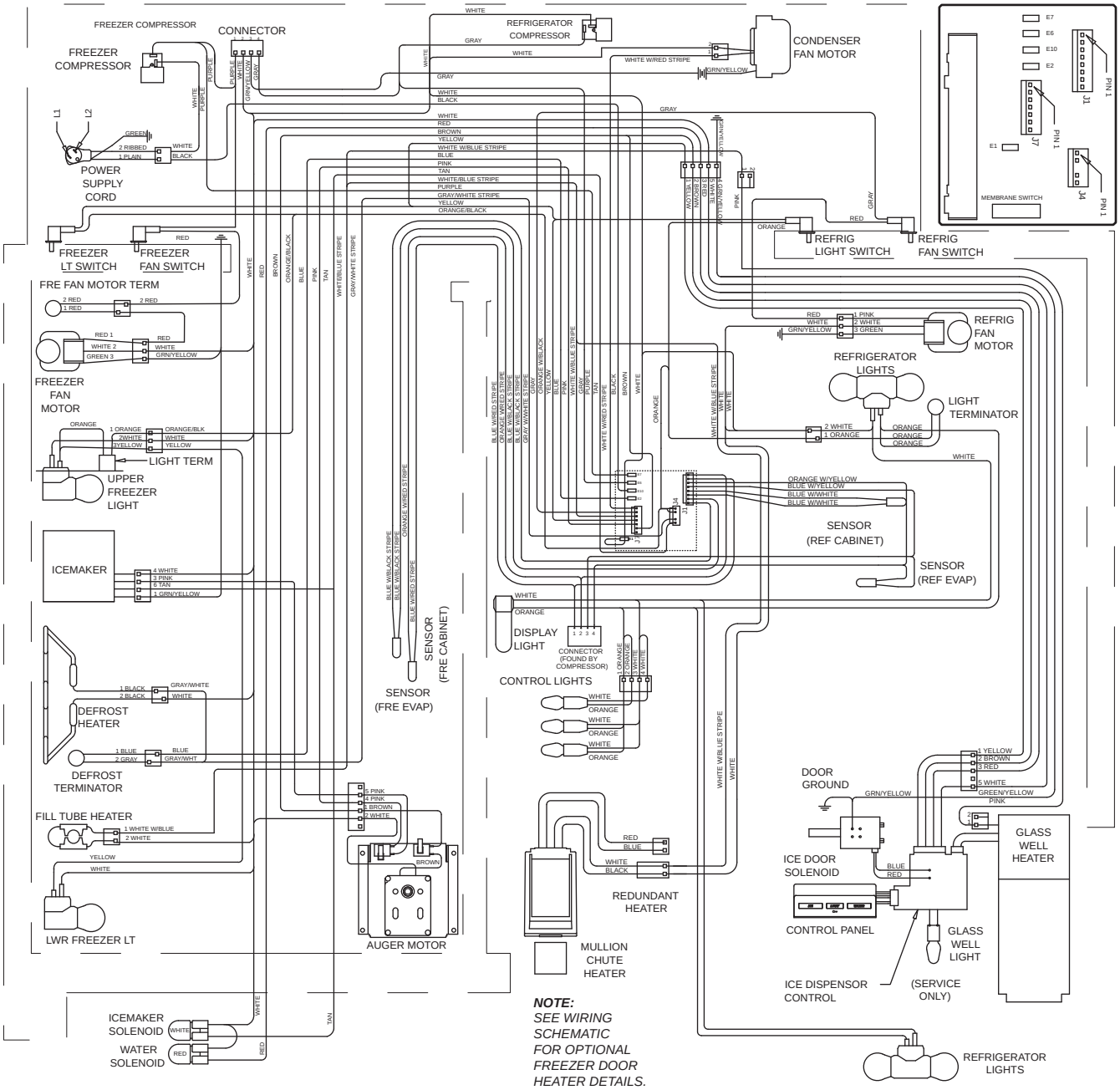

CONTROL BOARD SUMMARY

CIRCUIT	DESCRIPTION	FUNCTION	COLOR	CIRCUIT	DESCRIPTION	FUNCTION	COLOR
	120 VOLT CIRCUITS				120 VOLT CIRCUITS CONTINUED		
E1	NEUTRAL	NEUTRAL INTO BOARD	WHITE	J7-5	ICE MAKER	POWERS ICE MAKER	PINK
E2	DEFROST HEATER	POWERS DEFROST CIRCUIT	BLUE	J7-6	BULK ICE	POWERS AUGER MOTOR	BROWN
E6	REFRIGERATOR COMPRESSOR	POWERS REFRIG. COMPRESSOR	GRAY	J7-7	NOT USED		
E7	FREEZER COMPRESSOR	POWERS FREEZER COMPRESSOR	PURPLE				
E10	POWER IN	POWER INTO BOARD	BLACK				
J4-1	FREEZER LIGHT SENSOR	SENSES IF FREEZER DOOR OPEN	ORANGE/BLK		THERMISTER CIRCUITS		
J4-2	REF LIGHT SENSOR	SENSES IF REF DOOR OPEN	ORANGE	J1-1	FREEZER EVAPORATOR	SENSES FRE EVAP TEMP	ORANGE/RED
J4-3	NOT USED (NO PIN)			J1-2	FREEZER EVAPORATOR	SENSES FRE EVAP TEMP	BLUE/RED
J4-4	DEFROST SENSE-TERMINATOR	SENSES WHEN HEATER SHUTS OFF	GRAY/WHT	J1-3	REFRIGERATOR EVAPORATOR	SENSES REF EVAP TEMP	ORANGE/YELLOW
J5-5	ICE MAKER VALVE	SENSES WATER VALVE ACTIVATION	TAN	J1-4	REFRIGERATOR EVAPORATOR	SENSES REF EVAP TEMP	BLUE/YELLOW
J7-1	CONDENSER	POWERS CONDENSER FAN	WHT/RED	J1-5	REFRIGERATOR COMPARTMENT	SENSES REF COMPARTMENT TEMP	BLUE/WHITE
J7-2	REFRIG FAN SWITCH	POWERS REF FAN SW	GRAY	J1-6	REFRIGERATOR COMPARTMENT	SENSES REF COMPARTMENT TEMP	BLUE/WHITE
J7-3	ICE MAKER ACCESSORIES(FILL TUBE)	POWERS FILL TUBE AND ACCESSORIES	WHT/BLUE	J1-7	FREEZER COMPARTMENT	SENSES FREZ COMPARTMENT TEMP	BLUE/BLACK
J7-4	LIGHTS	POWERS LIGHTS (AND OPTIONAL FREEZER DOOR HEATER)	YELLOW	J1-8	FREEZER COMPARMENT	SENSES FREZ COMPARTMENT TEMP	BLUE/BLACK

P/N 7003702 REV A

WIRING SCHEMATIC MODELS: 685-3/695-3

WARNING
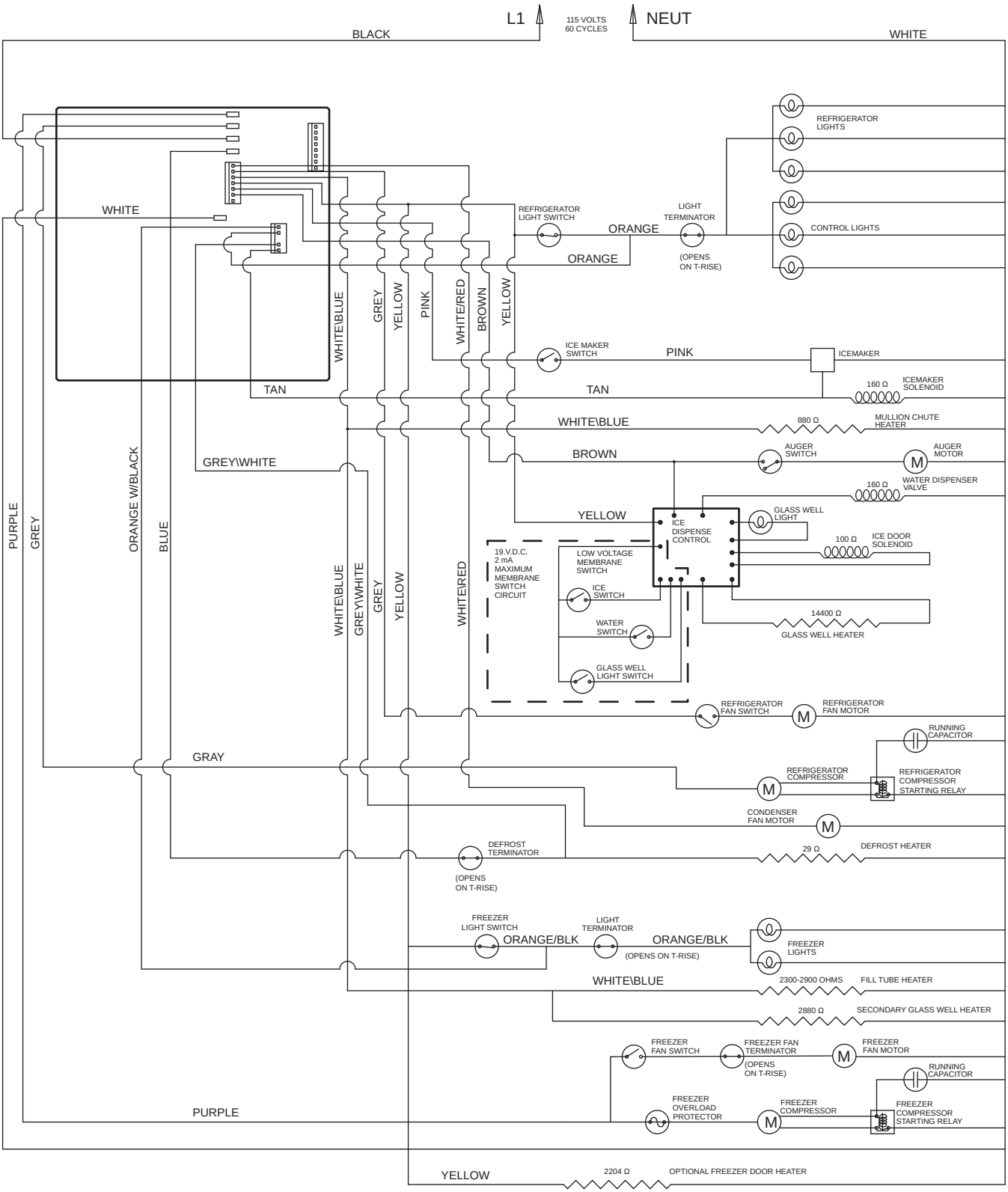
- This wiring information is provided for use by qualified service personnel only.
- Disconnect appliance from electrical supply before beginning service.
- Be sure all grounding devices are connected when service is complete.
- Failure to observe the above warnings may result in severe electrical shock.